Supplied by HeatingSpares247.com

INSTRUCTIONS FOR INSTALLATION AND SERVICING

Wall mounted COMBIcompact®
for central heating and instantaneous domestic hot water

Natural draught balanced flue
This appliance shall be installed in accordance with the relevant. Codes of Practice by British Gas or by an authorized installer (CORGI member)

These instructions should be left near with the user when the installation is completed.

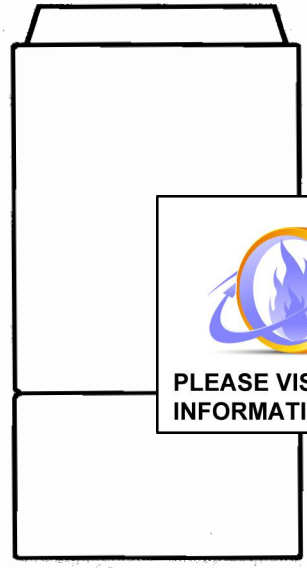

VCW GB 221 H
GC-No. 47 044 14

THIS DOCUMENT HAS BEEN PROVIDED BY
heatingspares 247.com
PLEASE VISIT WWW.HEATINGSPARES247.COM FOR FURTHER INFORMATION AND GENUINE PARTS & SPARES AT LOW PRICES

Vaillant

HEATING, CONTROLS, HOT WATER

Supplied by HeatingSpares247.com

Contents

		Page
1	Introduction	2
2	Technical data	3
3	Construction of appliance	4
4	Function	5
5	General requirements	6–13
6	Dimensions	14–15
7	Installation of the boiler	16
8	Delivery	17
9	Installation sequence	18–22
10	Electrical installation	23–29
11	Commissioning and testing	30–33
12	Assembling	34–35
13	Servicing of boiler	36–39
14	Replacement of parts	40–57
15	Fault finding	58–66
16	Electrical diagrams	67–69
17	Short part list	69–70
18	Technical data	72

CE

The COMBIcompact carries the "CE" Mark. This demonstrates that the boiler fulfils the essential requirements of the Gas Appliance Directive (Directive 90/396/EEC) and The Gas Appliances (Safety) Regulations 1992.

1 Introduction

The Vaillant gas-fired boiler is a wall-mounted natural draught balanced-flue appliance with built-in domestic hot water heater.

The boiler is **not** suitable for external installation.

Output ratings are shown in "Technical Data". The boiler is designed for use in a sealed water system with pumped circulation and includes the hot water system.

Contact the manufacturer for information on open vented installations.

Circulation pump, expansion vessel (for sealed system only), terminal box, control and safety devices are provided with the appliance.

The sealed system pressure relief valve is also provided.

An automatic system bypass is included in the boiler.

If desired an inhibitor may be used in the system. Guidance on the use of inhibitors is contained in these instructions.

The boiler contains a domestic hot water heat exchanger. The temperature in the heat exchanger is limited by the boiler control system and it is not normally necessary to install a scale reducer on the cold water mains inlet to the boiler. However, in exceptionally hard water areas to prevent scale formation in the property hot water system pipework a scale reducer may be fitted.

Supplied by HeatingSpares247.com

2 Technical Data

Subject to alteration

We cannot accept responsibility for damage as a result of non-observance of these installation and servicing instructions.

Type	VCW GB 221 H	Units
Nominal heating output	22 (75100) (79.2)	kW (BTU/h) (MJ/h)
Nominal heating input (based on gross C.V.)	27.3 (93200) (98.3)	kW (BTU/h) (MJ/h)
Main burner jet size for NG	16 x 7/130	number x mark.
Burner setting pressure Max rate Ignition rate	6.0 ± 0.5 (2.4) 1.6 (0.64)	mbar (in WG)
Minimum water flow for heating system 20 °C rise	940 (207)	l/h (Imp. Gal./h)
Water capacity of heat exchanger	0.57 (0.12)	l (Imp. Gal.)
Pump pressure available for central heating system	0.25 (8.4)	bar (feet)
Max. nominal flow temperature	90 (194)	°C (°F)
Maximum total water capacity of heating system (cold[1]) for sealed system	90 (20)	l (Imp. Gal.)
Delivered gas Gross C.V. (s.t.) Gas consumption (s.t.)	G 20 37.8 (1014) 2.60 (1.53)	MJ/m³ (BTU/cu. ft) m³/h (c.f.m.)
Domestic water specification to British standard Nominal output	22 (75000)	kW (BTU/h)
Nominal temperature Minimum water pressure Flow rate (45 °C)	65 (149) 0.65 (9.4) 90 (20)	°C (°F). bar (P.S.I.) l/min. (gal/min.)
D.H.W. temp. rise[2] 10 l/min. (2.2 gal/min.) flow rate, approx. water pressure required	32 1.6 (23.2)	(°C) bar (P.S.I.)
Water flow. min. Water pressure required	3.5 (0.77) 0.3 (4.4)	l/min. (Imp. G/min.) bar (P.S.I.)
Max. water pressure	10 (145)	bar (P.S.I.)
Weight	60 (132)	kg (pound)
Electric connection Voltage Input internal Fuse / external Fuse	230–240/50 125 2 / 3	V~/Hz W Amp (slow)

[1] For systems having a larger water capacity an additional expansion vessel can be installed easily.

[2] Higher DHW temp. rises can be achieved by adjusting the user selector (see user instructions).

Supplied by HeatingSpares247.com

3 Construction of appliance

1 Flue hood
2 Combustion chamber
3 Viewing window
4 Gas control unit
5 Circulating pump
6 Hydraulically controlled diverter valve
7 Pressure gauge
8 Flow thermometer
9 Terminal box electric system
10 Flow temperature selector
11 Fuses F2A
12 Heat exchanger domestic hot water
13 Heating switch
14 Main switch
15 Fuse electronic system 160 mA

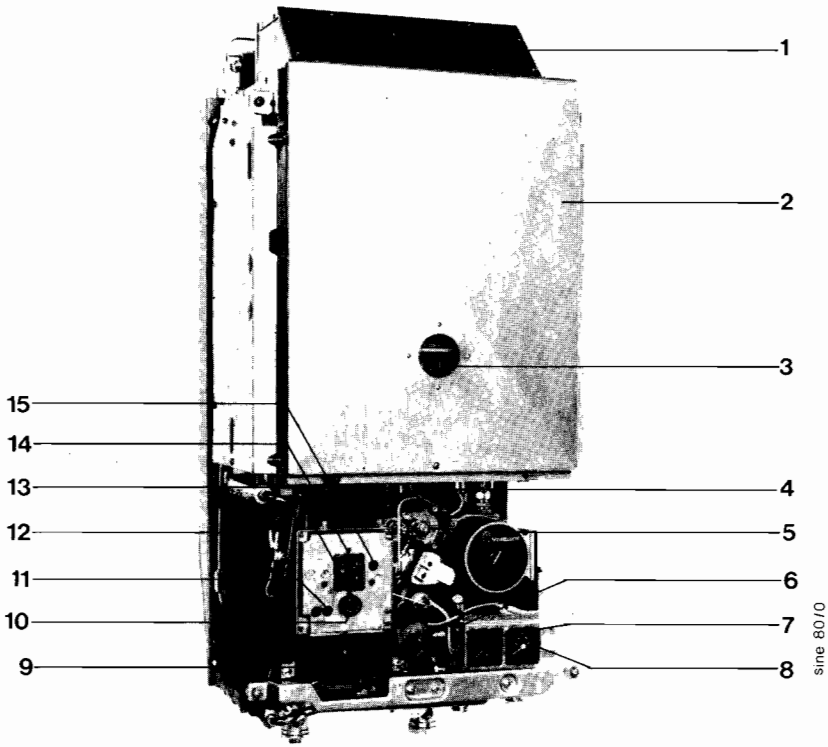

Fig. 1

Supplied by HeatingSpares247.com

4 Function

1 Flue gas-/ Air duct
3 Main heat exchanger
4 Venting point
5 Combustion chamber
6 Automatic air vent
8 Burner
9 Gas section
10 Gas operator
11 C.H. expansion vessel pressure test point
12 C.H. expansion vessel
13 Circulating pump
14 Hydraulically operated diverter valve
15 C.H. pressure relief valve
16 *Water section*
17 Water section diaphragm
18 D.H.W. cold supply
19 Gas service cock
20 C.H. return service cock
21 C.H. system
22 C.H. flow service cock
23 Gas supply
24 D.H.W. outlet
25 System bypass
26 Servo control valve
27 C.H. thermostat
28 Electronic control box
29 D.H.W. heat exchanger
30 D.H.W. thermostat
32 N.T.C. flow sensor
33 Overheat cut off sensor
35 D.H.W. expansion vessel
36 Thermoelectric F.F.D.

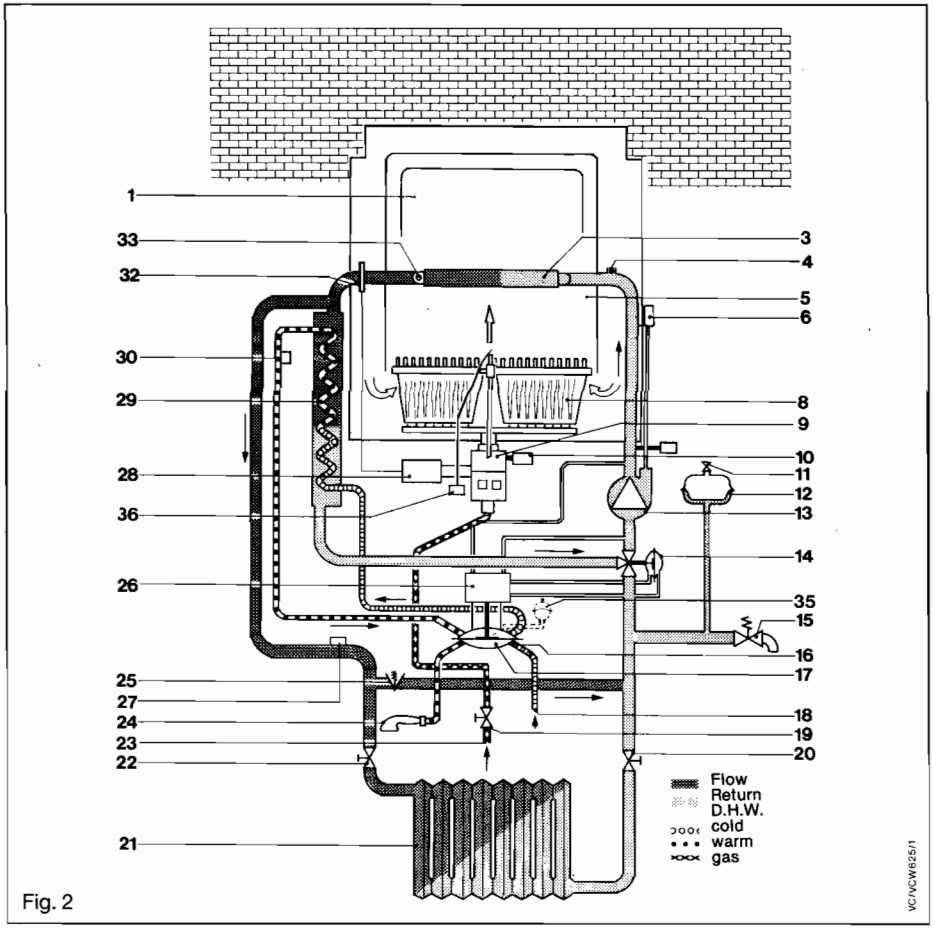

Fig. 2

Supplied by HeatingSpares247.com

5 General requirements

5.1 Related documents

The installation of the boiler must be in accordance with the relevant requirements of Gas Safety (Installations and Use) Regulation 1994*, current I.E.E. Wiring Regulations and the by-laws of the local Water-Undertaking. It should be in accordance with any relevant requirements of the Local Authority, Building Regulations, Building Standards (Scotland) Regulations and the relevant recommendations of the following British Standard Codes of Practice:

BS 5440: Flues and ventilation of gas fired boilers not exceeding 60 kW:
- Part 1: Flues
- Part 2: Ventilation

BS 5449: Specification for forced circulation hot water for domestic premises.
BS 5546: Specification for gas hot water supplies for domestic premises.
BS 6700: Services supplying water for domestic use within buildings and their curtilages.
BS 6798: Specification for installation of gas fired boilers not exceeding 60 kW input.
BS 6891: Specification for installation of low pressure gas pipework up to 28 mm (R1) in domestic premises (2nd family gas).
BS 7593: Treatment of water in domestic hot water central heating systems.
BRITISH GAS PUBLICATION DM2:
Guide for Installation in Timber Framed Housing.

Unvented primary circuits may be filled or replenished by means of a temporary connection between the circuit and a supply pipe provided a double check valve or some other no less effective backflow prevention device is permanently connected at the inlet to the circuit and the temporary connection is removed after use.

* Gas Safety (Installation and use) Regulation, 1994:

It is the law that all gas appliances are installed by competent persons, in accordance with the above regulations. Failure to install appliances correctly could lead to prosecution. It is in your own interest, and that of safety, to ensure that the law is complied with.

5.2 Location

The location chosen for the boiler must permit the provision of a satisfactory flue termination. The location must also provide adequate space for servicing and air circulation around the heater. The boiler may be installed in any room, although particular attention is drawn to the requirements of the I.E.E. Regulations and, in Scotland, the electrical provisions of the building regulations, in respect of the installation of the boiler in a room containing a bath or shower.

Note: Where a room sealed appliance is installed in a room containing a bath or shower, any electrical switch or appliance control utilising mains electricity should be so situated that it cannot be touched by a person using the bath or shower.

Where the installation of the boiler will be in an unusual location, special procedures may be necessary and BS 5546 and BS 6798 give detailed guidance on this aspect.

A compartment used to enclose the boiler must be designed and constructed specifically for this purpose. An existing cupboard or compartment may be used provided that it is modified for the purpose.

Details of essential features of cupboard/compartment design including airing cupboard installations are given in BS 6798.

5.3 Gas supply

The local gas supplier should be consulted at the installation planning stage in order to establish the availability of an adequate supply of gas.

An existing service pipe must not be used without prior consultation with the local gas supplier.

A gas meter is connected to the service pipe by the local gas supplier or their contactor.

An existing meter should be checked to ensure that it is capable of passing an additional 2.60 m^3/h (91.8 ft^3/h) before the VCW GB 221 H is installed.

Installation pipes should be fitted in accordance with BS 6891.

Pipework from the meter to the boiler must be of an adequate size. Do not use pipes of a smaller size than the boiler gas connection.

The complete installation must be tested for soundness and purged as described in BS 6891.

5.4 Electrical supply

Wiring external to the boiler must be installed in accordance with the current I.E.E. Regulations and any local regulations which apply.

The boiler is supplied for connection to a 230–240 V~, 50 Hz. Fuse rating is 3 A.

THIS APPLIANCE MUST BE EARTHED.

The method of connection to the mains electricity supply must provide a means of completely isolating the boiler and its ancillary controls. Isolation is preferably by the use of a fused

Supplied by HeatingSpares247.com

three-pin plug and unswitched shuttered socket outlet, both complying with the requirements of BS 1363.

Alternatively, a 3 Amp fused doublepole switch with a 3 mm contact separation on both poles may be used.

5.5 Flue system

Detail recommendations for flueing are given in BS 5440:1. The following notes are intended to give general guidance.

The air/flue duct terminal assembly can be completely assembled from the inside of the building.

1. The terminal must be positioned such that the combustion products can disperse freely at all times.
2. In certain weather conditions a terminal may steam (high efficiency appliance) and positions where this could cause nuisance should be avoided.
3. If the terminal is fitted within 1000 mm of a plastic or painted gutter or within 500 of painted eaves an aluminium shield of at least 500 mm length should be fitted to the underside of the gutter or painted surface.
4. The air inlet/products outlet duct and the terminal of the boiler must not be closer than 25 mm (1 in.) to combustible material. Detailed recommendations on protection of combustible material are given in BS 5440:1.
5. If the terminal is fitted less than 2 m above a balcony, above ground or above a flat roof to which people have access then a suitable guard must be provided and fitted.

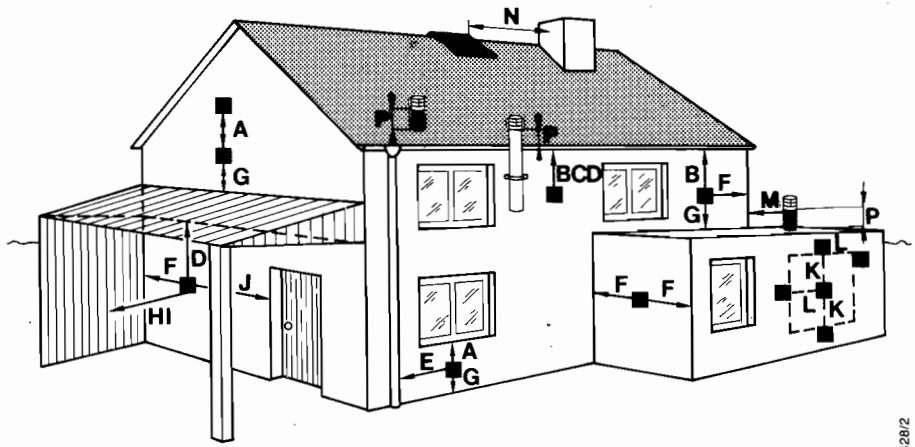

Fig. 3

Terminal position for balanced flue

(minimum distance)	mm		mm
A – Directly below an openable window or other opening (eg air brick)	300	J – From an opening in the car port (e.g. door window) into dwelling	1200
B – Below gutters, soil pipes or drain pipes	300	K – Vertically from a terminal on the same wall	1550
C – Below eaves	300	L – Horizontally from a terminal on the same wall	300
D – Below balconies or car port roof	600	M – From the wall on which the terminal is mounted	N/A
E – From vertical drain pipes and soil pipes	75	N – From a vertical structure on the roof	N/A
F – From internal or external corners	600	P – Above intersection with roof	N/A
G – Above ground or balcony level	300		
H – From a surface facing the terminal	600		
I – From a terminal facing the terminal	600		

Supplied by HeatingSpares247.com

5.6 Air supply

Detailed recommendations for air supply are given in BS 5440:2. The following notes are intended to give general guidance.

Room sealed balanced flue appliances do not require the room or internal space to have a permanent air vent.

5.6.1 Cupboard or compartment air supply

Where the boiler is to be installed in a cupboard or compartment, permanent air vents are required for cooling purposes in the cupboard or compartment at high and low level. These air vents must either communicate with the room or internal space or be direct to outside air.

The minimum effective areas of the permanent air vents required in the cupboard or compartment are specified below.

air vent position \ appliance		VCW GB 221 H
High level	Air from room or internal space	246 cm² 38 in²
	Air direct from outside	123 cm² 19 in²
Low level	Air from room or internal space	246 cm² 38 in²
	Air direct from outside	123 cm² 19 in²

Note: Both air vents must communicate with the same room or internal space or must be both on the same wall to the outside air.

5.7 Water circulating system

Detailed recommendations for the water circulation system are given in BS 6798 and BS 5449:1 (for small bore and micro bore central heating systems). The following notes are of particular importance. Pipework not forming part of the useful heating surface should be insulated to help prevent heat loss and possible freezing, particularly where pipes are run through roof spaces and ventilated underfloor spaces.

Draining taps must be located in accessible positions which permit the draining of the whole system including the boiler and the hot water system. Draining taps should be at least 1/2 in. BSP nominal size and be in accordance with BS 2879.

Supplied by HeatingSpares247.com

The boiler is suitable for use with minibore or microbore systems.

It is recommended to use copper tubing to BS 2871:1 for water carrying pipework.

The use of horizontal pipe runs should be avoided wherever possible in order to prevent air collecting in the system. If horizontal runs are unavoidable the pipes should rise upwards towards a vent point.

For general guidance reference should be made to the British Gas publication.

– BRITISH GAS SPECIFICATIONS FOR DOMESTIC WET CENTRAL HEATING SYSTEMS – and to BS 6798 and BS 5449:1.

Particularly where a new boiler is to be fitted to an existing system, it is good practice that the system is thoroughly cleansed. This cleansing should take place prior to the fitting of the new boiler and be in accordance with BS 7593.

For advice on the application of system cleansers contact Sentinel, Grace Dearborn Ltd, Widnes, Cheshire, WA8 8UD. Tel.: 0151 495 1861.

5.7.1 Single pipe system (Fig. 4)

The heat emitters are installed on a closed circuit. The necessary water quantitiy for every heat emitter (radiator) must be ensured. This can be done for instance by using suction fittings in the return connection of the radiators. The radiator sizes shall be calculated on the basis of temperature distribution around the circuit.

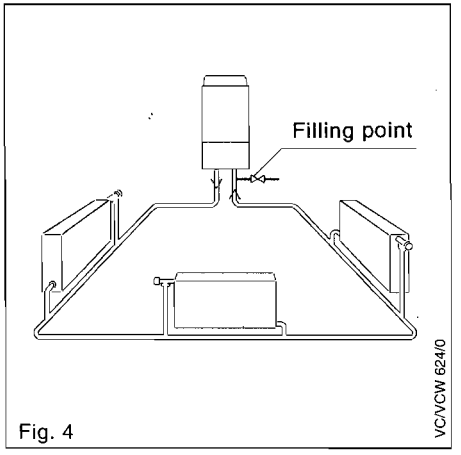

Fig. 4

Supplied by HeatingSpares247.com

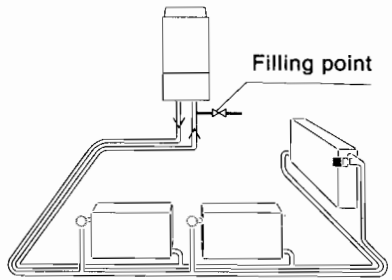

Fig. 5

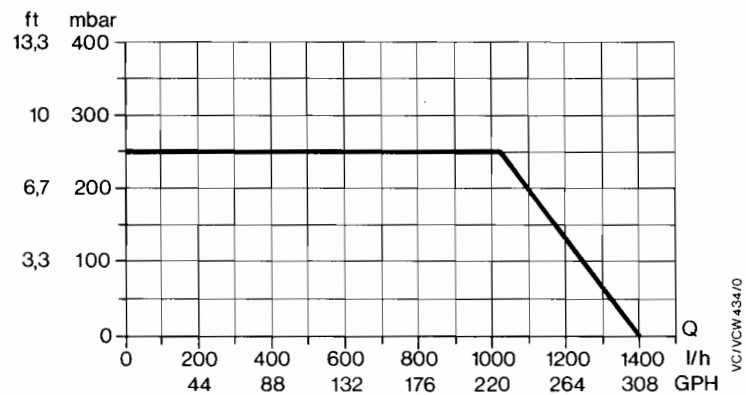

Fig. 6

N.B. The primary filling point may be placed at any convenient point on the circuit.

5.7.2 Two-pipe system (Fig. 5)

The radiators are installed parallel and the flow temperature therefore is the same for every radiator.

A typical central heating installation is shown in figure 5.

5.8 Circulating pump

The circulating pump is included into the boiler. The remaining conveying capacity can be taken from the diagram (Fig. 6).

5.9 System by-pass

A system by-pass is included within the boiler. The boiler is suitable for use in systems with thermostatic radiator valves and no additional by-pass is required.

5.10 Open vented system

Refer to manufacturers for further details.

Supplied by HeatingSpares247.com

5.11 Sealed systems

Sealed systems do not require feed and expansion cisterns, open vents etc. Only good quality radiator valves and fittings should be used in order to prevent excessive detrimental topping-up.

5.11.1 Pressure relief valve

A pressure relief valve is provided ready-assembled to the return C.H. service cock (Fig. 10). This safety device is required on all sealed C.H. systems and is pre-set at 3 bar and is provided with 3/4 in. BSP connection for a discharge pipe.

5.11.2 Pressure gauge

This is factory fitted to the boiler and indicates the primary circuit pressure to facilitate filling and testing.

5.11.3 Expansion vessel

An expansion vessel is incorporated into the boiler suitable for a sealed heating system with a maximum water contents of 90 litres (20 Imp. galls.).

If the nominal capacity of the built-in expansion vessel is not sufficient for the heating system (for instance in case of modernization of old open systems) an additional expansion vessel can be installed external to the appliance in the return pipe as close as possible to the boiler in accordance with BS 5449: Part. 1.

Guidance on the sizing of additional expansion vessel sizing is given in Table A (p. 13).

5.12 Filling and make up (Fig. 7)

The system should be filled with water via a separate filling point fitted at a convenient point on the heating circuit. Where local Water Authority Regulation allows, a temporary connection to the mains may be used. The connection must be removed when filling is completed. Where local Water Authority Regulation does not allow temporary connection, a sealed system filler pump with break tank must be used. **The heating system will not be filled automatically from the domestic side.**

In principle, sealed systems do not require water make-up facilities, but experience has shown that some make-up may be necessary.

Methods of filling sealed systems are given in appendix A of B.S. 6798 and B.S. 5449: Part.1.

5.13 Parallel installation

If two appliances are installed in parallel for one heating system, it is essential to install one nonreturn valve each in the heating system flow pipe of the appliances.

Refer to manufacturers for further details.

5.14 Gas and water connection

A general view of pipework for gas and water connection is given in Fig. 8.

The wall distance (to the finished wall) of pipework for gas and heating system is 50 mm and 35 mm for domestic water pipework.

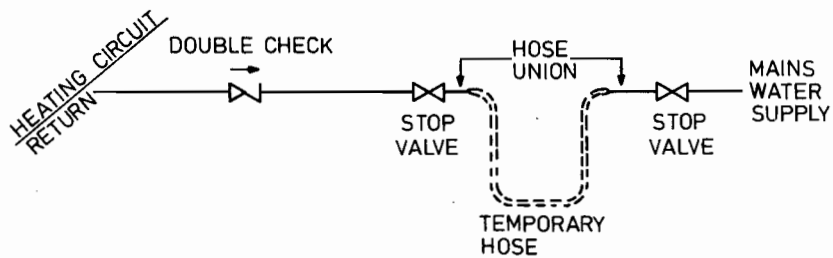

Fig. 7

VC/VCW turbo 109/0

Supplied by HeatingSpares247.com

5.15 Venting

The appliance is fitted with an automatic air vent. Additional provision should be made to enable the heating system to be vented during filling and commissioning either by automatic air vents or manually. Hydroscopic types of automatic air vents should not be used on a sealed system as these allow evaporation of small quantities of water.

5.16 DHW expansion vessel accessory

A DHW expansion vessel kit is available as an optional extra from Vaillant Ltd. This expansion vessel kit should be fitted to the boiler whenever either a stop valve of the loose jumper type or a non return valve are present in the cold water mains supply to the boiler (fig. 7.1).

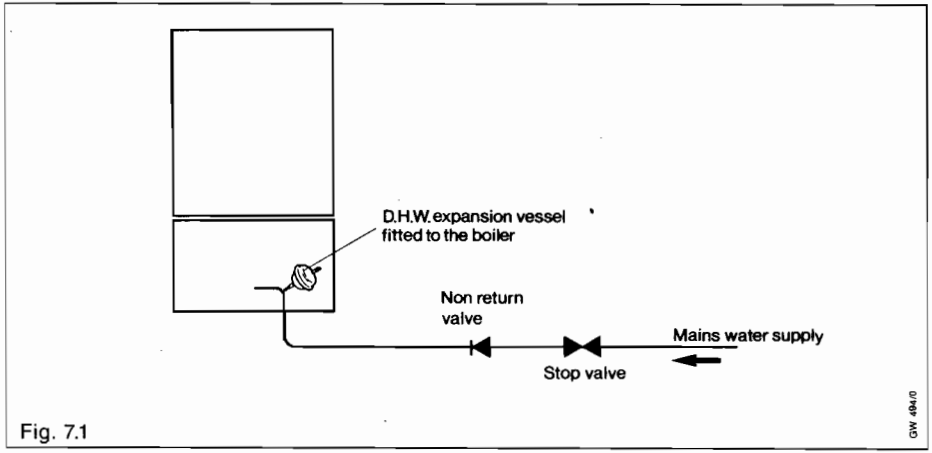

Fig. 7.1

1 Connection support bracket
2 Service cock (flow of heating system)
3 Domestic hot water connection
4 Compression union (gas)
5 Gas service cock
(supplied with the boiler)
6 Cold water connection
with shut-off valve
7 Service cock (return of heating system)
8 Discharge pipe
9 Pressure relief valve
10 Compression union
(return of heating system)
11 Compression union
(flow of heating system)
23 Frame of appliance (lower connection)

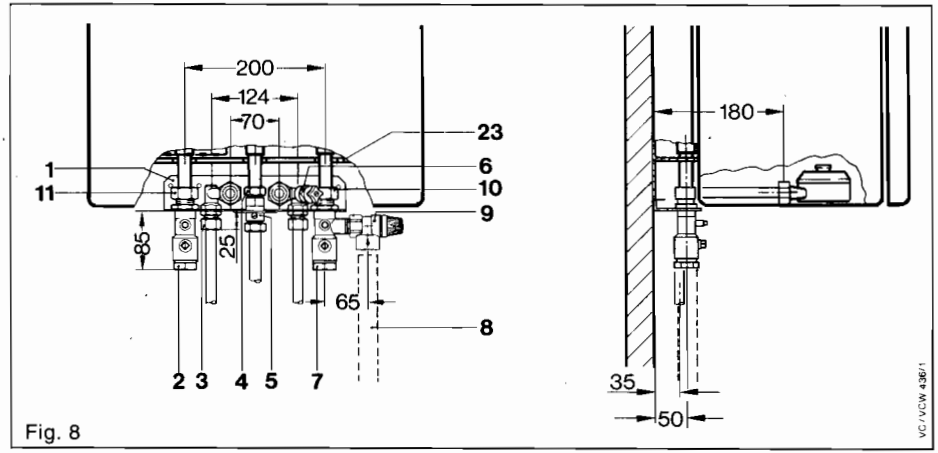

Fig. 8

Supplied by HeatingSpares247.com

Table A **Sizing of additional expansion vessels:**

Safety valve setting (bar)	3,0								
Vessel charge pressure (bar)	0,5				1,0			1,5	
Initial system pressure (bar)	0,5	1,0	1,5	2,0	1,0	1,5	2,0	1,5	2,0
Total water content of system	Expansion vessel volume (litres)								
litres									
25	2,1	3,5	6,5	13,7	2,7	4,7	10,3	3,9	8,3
50	4,2	7,0	12,9	27,5	5,4	9,5	20,6	7,8	16,5
75	6,3	10,5	19,4	41,3	8,2	14,2	30,9	11,7	24,8
100	8,3	14,0	25,9	55,1	10,9	19,0	41,2	15,6	33,1
125	10,4	17,5	32,4	68,9	13,6	23,7	51,5	19,5	41,3
150	12,5	21,0	38,3	82,6	16,3	28,5	61,8	23,4	49,6
175	14,6	24,5	45,3	96,4	19,1	33,2	72,1	27,3	57,9
200	16,7	28,0	51,8	110,2	21,8	38,0	82,4	31,2	66,2
225	18,7	31,5	58,2	124,0	24,5	42,7	92,7	35,1	74,5
250	20,8	35,0	64,7	137,7	27,2	47,5	103,0	39,0	82,7
275	22,9	38,5	71,2	151,5	30,0	52,2	113,3	42,9	91,0
300	25,0	42,0	77,7	165,3	32,7	57,0	123,6	46,8	99,3
325	27,0	45,5	84,1	179,1	35,7	61,7	133,9	50,7	107,6
350	29,1	49,0	90,6	192,8	38,1	66,5	144,2	54,6	115,8
375	31,2	52,5	97,1	206,6	40,9	71,2	154,5	58,5	124,1
400	33,3	56,0	103,6	220,4	43,6	76,0	164,8	62,4	132,4
425	35,4	59,5	110,1	239,2	46,3	80,7	175,1	66,3	140,7
450	37,5	63,0	116,5	247,9	49,0	85,5	185,4	70,2	148,9
475	39,6	66,5	123,0	261,7	51,8	90,2	195,7	74,1	157,2
500	41,6	70,0	125,9	275,5	54,5	95,0	206,0	78,0	165,5
For system volumes other than those given above, multiply the system volume by the factor across	0.0833	0.140	0.259	0.551	0.109	0.190	0.412	0.156	0.331

The volume of the expansion vessel found from the above table, should be multiplied by 0,9 to take into account the flow temperature.

Supplied by HeatingSpares247.com

6 Dimensions

(all dimensions in mm)

Terminal / duct assembly Art.-No 251, 252, 253, 254 for installation in a pre-planned wall opening.
Terminal / duct assembly Art.-No. 255 (Installation for cementing).

3 Heating system return ¾" Rp (¾ in BSP)
4 Cold water connection (15 mm)
5 Gas connection (15 mm)
6 Hot water connection (15 mm)
7 Heating system flow ¾" Rp (¾ in BSP)
8 Inlet bushings in the terminal box for external connections
9 Terminal box
10 Wall outlet for electrical connections
11 Pre-assembled connection set with service cocks (flow and return) pressure relief valve, cold and hot water connection
12 Pressure relief valve ¾" Rp (¾" BSP)

VCW GB 221 H

Terminal and duct assembly using wall ties (cemented in)

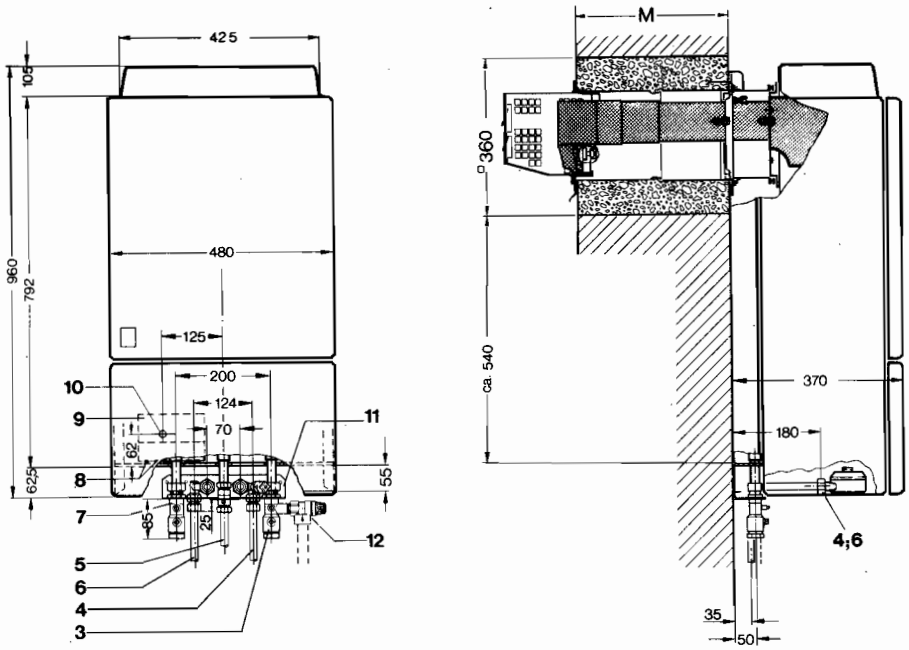

Fig. 9

Supplied by HeatingSpares247.com

Terminal and duct assembly in a pre planned wall opening

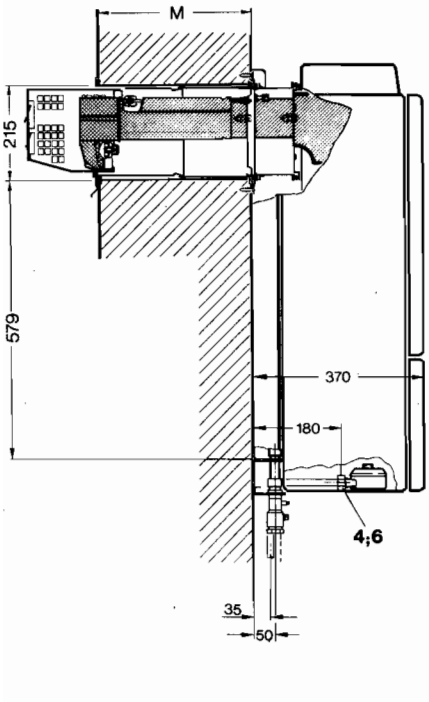

The air/flue duct and terminal assemblies are available in five different sizes, covering a range of wall thicknesses as shown below:

(M = wall thickness)

Art.-No. 251: M = 100-150 mm (3.9 - 6.0 in)
Art.-No. 252: M = 150-235 mm (6.0 - 9.25 in)
Art.-No. 253: M = 235-325 mm (9.25-12.8 in)
Art.-No. 254: M = 325-415 mm (12.8 -16.4 in)
Art.-No. 255: M = 325-600 mm (12.8 -23.6 in)

Supplied by HeatingSpares247.com

7 Installation of the boiler

7.1 General

The boiler is to be wall-mounted and a vertical flat area of wall is required which must be of sufficient area for the boiler together with clearances for installation and servicing.

The template provided includes these clearances which are:

* 80 mm (3.2 in.) either side of the boiler

Note:

A clearance of 25 mm either side of the boiler will allow the safe and correct functioning of the appliance and also allow all servicing and repair operations except for the replacement of the main heat exchanger. The replacement of this component will require a side clearance of 80 mm either side of the boiler which may be catered for by allowing removal of kitchen units etc.

* 150 mm (6 in.) below the boiler
* 100 mm (4 in.) on top of the boiler

Additional clearances than those given above may be necessary for installation, as this varies from site to site, it is left to the discretion of the installer.

If the appliance is to be fitted on a wall of combustible material, the wall must be protected by a sheet of fire proof material.

In addition, a minimum clearance of 500 mm (20 in.) must be available at the front of the appliance to enable the boiler to be serviced.

Accessories	Order no.
1) Pre-assembled connection group incl. isolating valves (flow and return), pressure relief valve, cold and hot water connections	9313
2) terminal / duct assemblies[1] wall thickness:	
100–150 mm (3.9 – 6.0 in)	251
150–235 mm (6.0 – 9.25 in)	252
235–325 mm (9.25–12.8 in)	253
325–415 mm (12.8 –16.4 in)	254
325–600 mm (12.8 –23.6 in)[2]	255
3) terminal guard[3]	358 GB

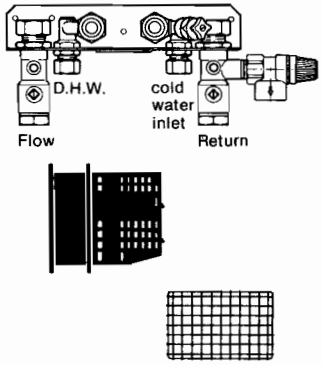

Fig. 10

IMPORTANT NOTICE

If the boiler is to be fitted in a timber framed building it should be fitted in accordance with the British Gas publication 'Guide for Gas Installations in Timber Frame Housing'. Reference DM2. If in doubt advice must be sought from the Local Gas Region of British Gas.

7.2 Installation accessories

The connection accessories for the connection of the boiler are listed in the Fig. 10.

Notes

[1] Air/flue duct assemblies Nos. 251-254 are suitable for installation in a pre-planned wall opening or for cementing-in.

[2] Air/flue duct assembly No. 255 must be cemented-in.

[3] Should the terminal of the air/flue duct assembly need to be protected by a terminal guard, a suitable guard is available from Vaillant Ltd. (Art. No. 358 GB).

Supplied by HeatingSpares247.com

8 Delivery

The Vaillant boiler is delivered in three packages:

the cased boiler (item 1, Fig 11).
pre-assembled installation set (order-no.: 9313) and
the terminal and duct assembly (order-no.: 251-255)

The foam packing shells (2) contain the following:

a) Upper front panel (3)
b) Door panel (4) and screen plate (4a)
c) Template (5)
d) Installation instructions and user instructions (6)
e) Gas service cock
f) Flue duct connecting piece (9)
g) The appliance (7)
h) Flue hood cover (10)

Note: Lift boiler by the appliance frame

Check on the data plate (8) the appliance is the correct model for the gas supply.

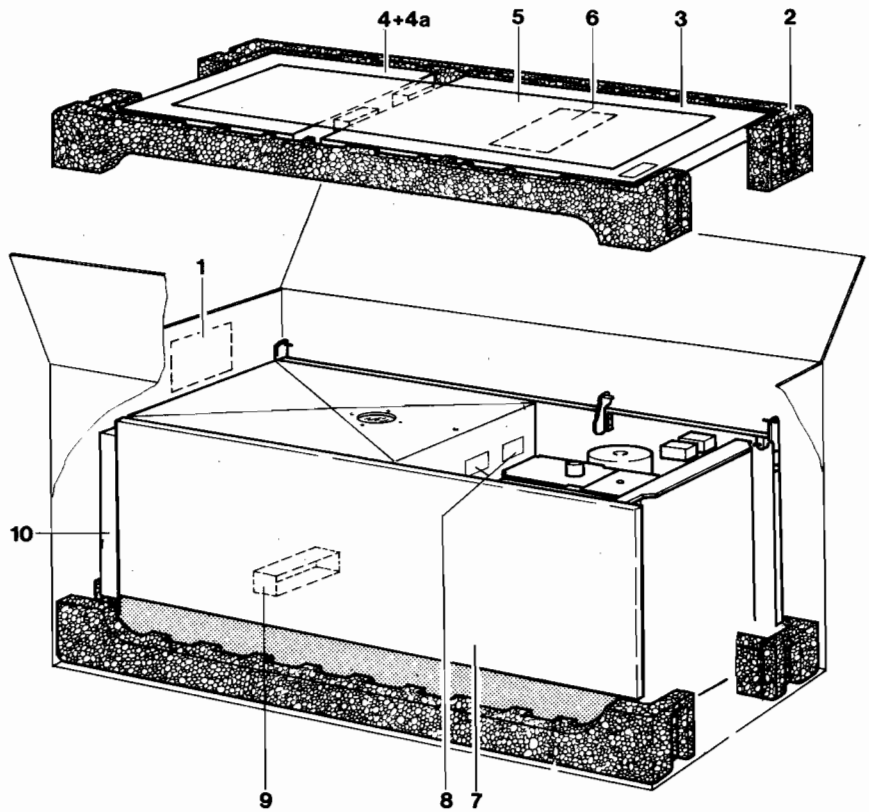

Fig. 11

Supplied by HeatingSpares247.com

9 Installation sequence

Using the template (Fig. 12)

— Fix the template onto the selected position.

The sequence of fitting is:

— Terminal and duct assembly
— Connection set
— Appliance

The paper template shows the appliance with the necessary clearance around for servicing and air circulation.

Fix the paper template onto the selected position. Check with a plumb line that the centre line (℄) of the paper template is vertical.

Before proceeding check the following:

a) the terminal and duct assembly is correct for the thickness of the wall (see Fig. 9 for dimensions)

b) the resulting terminal position is in accordance with section 5.5

Mark the positions for the securing screws (air duct and connection group) by e.g. marking through the template.
Mark the position of the hole for the air/flue duct assembly by e.g. marking through the template at the corners of the hole.

Note:

The template shows two sizes of holes. Ensure that the correct size of hole is used as follows:

— The smaller hole size (215 mm high x 315 mm wide) is used for air/flue duct assemblies No. 251, 252, 253 and 254. It is important that the hole is neatly and accurately cut.

— The larger hole size (360 mm x 360 mm) **must** be used for air/flue duct assembly No. 255. This assembly must always be cemented in place. The air/flue duct assemblies No. 251, 252, 253 and 254 can alternatively be cemented in place if required using this larger hole size.

Refer to the separate installation instructions for the terminal and air/flue duct.

Remove template carefully and fit the terminal and air/flue duct into the wall following the separate instructions.

After installing the terminal and air/flue duct assembly, replace the template and check position of securing screws for connection group. Fit the connection group by drilling 3 holes with 8 mm diameter (5/16 in) out of 7. Use the alternative fixing holes where necessary.

Fit the connection group in position using the wall plugs and screws provided, ensuring that the connection group is level.
If the condition of the wall is poor, additional or alternative screw fixings will be required to ensure adequate support.

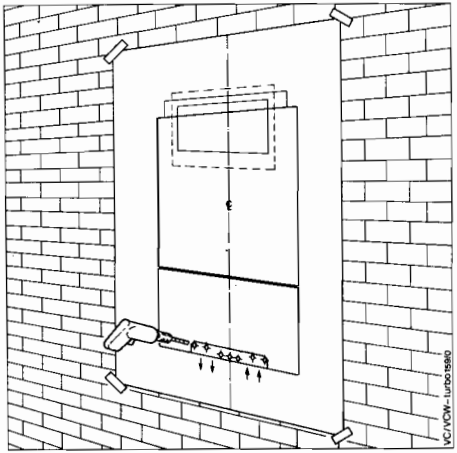

Fig. 12

Supplied by HeatingSpares247.com

9.1 Domestic cold and hot water connection

Note:

When the appliance is fitted, some adjustment of the position of the domestic hot and cold water connection fittings on the connection set may be necessary in the horizontal plane (e.g. movement up to 3 mm (0.12 in.) out from the wall). If the intended pipework cannot accommodate this movement, do not make the final domestic hot and cold water pipe connections to the connection set until after the appliance has been fitted.

- **Flush out all foreign matter from the supply pipe before connecting to the connection set.**
- Fit the 15 mm domestic mains water inlet pipe to the right hand compression union (2) and the 15 mm hot water outlet pipe to the left hand compression union (3).
- Check domestic water system for soundness.

  N.B.
  The boiler has a maximum domestic water working pressure of 10 bar. A pressure relief valve is fitted to the D.H.W. system which is set at 10 bar. If water pressure exceeds this value a pressure reducing valve will have to be fitted to the cold water inlet.

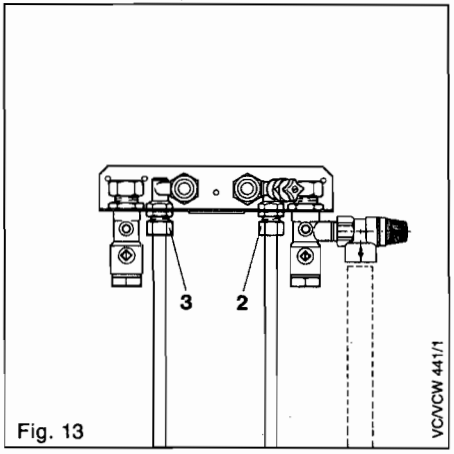

Fig. 13

Supplied by HeatingSpares247.com

9.2 Connection of heating system

Flush out all foreign matter from the flow and return pipe before connecting to the connection set.

Heating system flow and return should be connected to the connection set as shown in Fig. 14 via 3/4" B.S.P. adaptors.

Fill the heating system and test for soundness.

9.3 Pressure relief valve and overflow

The pressure relief valve (4), required for a sealed system, is included in the connection set 9313.

15 or 22 mm pipe should be connected to the pressure relief valve via a 3/4" B.S.P. adaptor.

This discharge pipework should be as short as possible and installed with a continuous fall away from the boiler. The pipe should terminate in a position which ensures that any discharge of water or steam from the valve cannot create a hazard to persons in or about the premises, or damage to any electrical components or external wiring, and the point of discharge should be clearly visible. The discharge must not terminate above a window, an entrance or any type of public access. The installer must consider that the pipe could discharge boiling water.

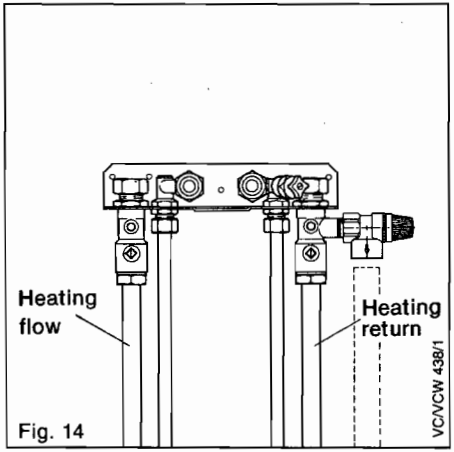

Fig. 14

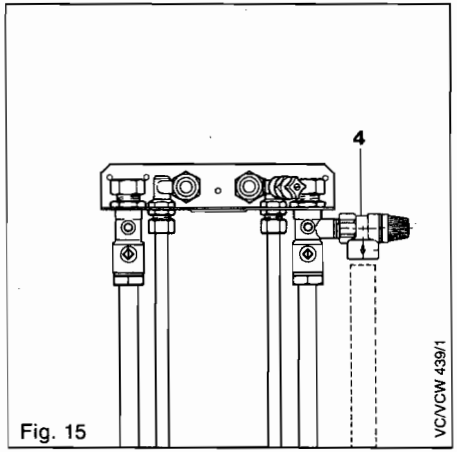

Fig. 15

Supplied by HeatingSpares247.com

9.4 Fitting the appliance

Close service cocks (5), unscrew union nuts (6) and take off the olive-shaped plastic plugs.

Close mains water service cock (8) and unscrew the union nuts (9), discard plastic plug.

Take care not to lose sealing washers.

Unpack boiler from carton.

Important note

If changing the appliance against a VCW-sine 18T3W the external terminal of the existing air/flue duct assembly (VCW-sine 18 T3W installation) must, before the new VCW 221 GB is installed, be replaced by the new external terminal (No. 251-255) as described in the installation instructions 80 69 03.

Important

The flue duct connection piece is stored on the rear of the appliance with tape for transportation purposes (see 9, Fig. 11). This component is essential for the correct functioning of the appliance. Fit this flue duct connection piece (20, Fig. 18) onto the telescopic duct of the wall assembly (16, Fig. 18) using the two captive screws. Slide the telescopic wall flue duct in such that it does not protrude more than 50 mm from the wall face.

Remove side panels from the boiler (as in Fig. 35) and packing aids as well as plastic caps from the connections. Push union nuts (6) and compression rings (7) onto the C.H. flow and return pipes of the appliance. Temporarily secure nuts and rings well clear of the ends of the pipes with tape.

Remove the two nuts and bolts securing the reinforcing bracket to the appliance frame. (See Fig. 19). Remove the two brass M 8 nuts from the wall from the fixing bolts (1, Fig. 18). Mount the appliance by inserting the pipes into the connection group and hang the appliance on the fixing bolts (ST, Fig. 19). Support the appliance whilst replacing the reinforcing bracket (RB, Fig. 19) over the fixing bolts. Secure appliance and reinforcing bracket with the brass M8 nuts. (N, Fig. 19). Loosen the back nuts securing the domestic hot and cold connection fittings on the connection group support bracket to permit movement. Align domestic hot and cold water connections to the appliance, fit sealing washers and tighten union nuts (9, Fig. 16). Retighten back nuts. Complete final 15 mm pipe connections to the connection group if not already carried out in section 9.1. Remove tape and tighten union nuts (6, Fig. 16).

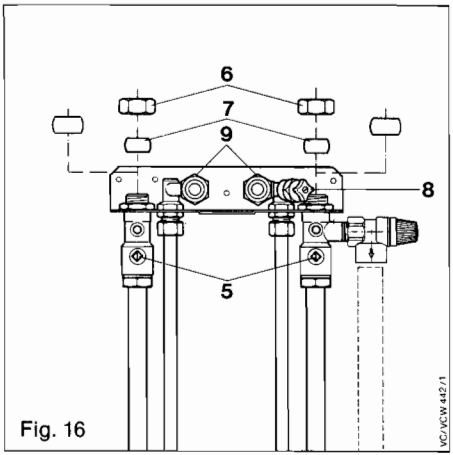

Fig. 16

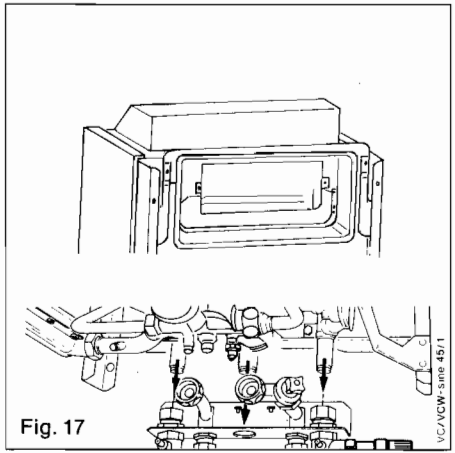

Fig. 17

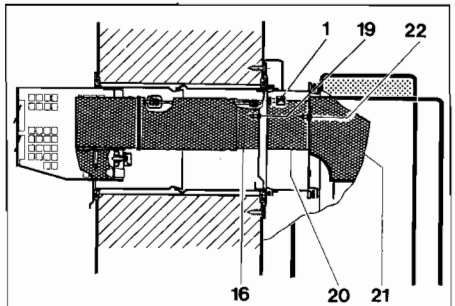

Fig. 18

1 Fixing bolts
16 Telescopic duct
19,22 Sheet metal screw
20 Flue duct
21 Flue hood

Supplied by HeatingSpares247.com

At this stage it is essential that the appliance flue outlet is connected to the wall terminal assembly. Proceed as follows:

— Remove inner case front panel (see 13.4)

— Remove inner case top panel (8 screws)

— Locate the flue duct connecting piece onto the flue hood spigot (20 and 21, Fig. 18) and secure using the captive screws on each side of the flue hood (22, Fig. 18). Take care to ensure that the connecting piece is located squarely over the flue hood spigot.

— Replace inner case top panel (8 screws)

— Do not replace inner case front panel at this stage.

9.5 Gas connection

Fit the gas service cock (5) to the appliance.

Ensure the gas service cock is fully located on the appliance and the ON/OFF control is accessible.

Clean out all foreign matter from the gas supply pipe before connecting to the service cock!

Connect the gas supply pipe to the service cock and tighten.

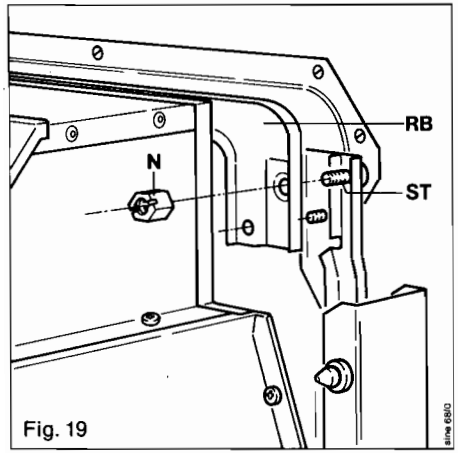

Fig. 19

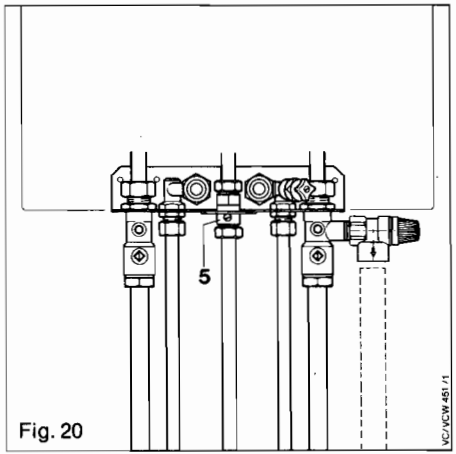

Fig. 20

Supplied by HeatingSpares247.com

10 Electrical installation

Vaillant boilers are completely wired. It is only necessary to connect to the electrical mains and the room thermostat. Connect to a 230–240 V (~), 50 Hz electrical supply fused 3 A.

Warning! This appliance must be earthed.

The method of connection to the electricity supply must facilitate complete isolation and should preferably be via a fused, threepin plug and unswitched, shuttered socket, both complying with the requirements of BS 1363. Alternatively, connection may be made via a fused, double-pole isolator having a contact separation of at least 3 mm in all poles and supplying the boiler and system controls only.

When connecting the power-supply cord, ensure that the length of the wires is such that the current-carrying conductors become taut before the earthing conductor, should the cord slip from the cable clamp.

After removing the terminal box cover (1) connect the mains with the wire coloured blue to the terminal 1 (N) and the wire coloured brown to the terminal 2 (L) and the earth-wire coloured green and yellow to the terminal marked ⏚.

A 3 core flexible cord according BS 6500 tables 6, 8 or 16 (3 x 0,75 to 3 x 1,5 mm²) should be used. A cardboard label showing the correct mains connection to the terminals is in the terminal box.

Do not connect the electrical main supply to the terminals 7, 8, 9!

Use the first left-hand cable clamp for the power supply cord.

Full wiring diagrams for various control schemes are shown in Fig. 22–27. Take care that the cords to the terminal box can not touch the hot water pipework, otherwise cords having a minimum appropriate T-rating of 90 shall be used. In the event of an electrical fault after installation, preliminary system checks i.e. earth continuity, polarity, resistance to earth shall be carried out as detailed in the B.G. Multimeter Instruction book.

List of terminals

Terminals	Connection
1, 2	Mains
3, 4	Room thermostat (230–240 V~)
5	Neutral for ext. controls (230–240 V~)
7, 8, 9 (20 V only)	N/A (MUST NOT BE USED)
10, 11, 12	N/A (MUST NOT BE USED)

1 Terminal box cover
2 Screw
3 Terminal strip
4 Earth connection
5 Cable grip
6 Cable grommet
7 Fuses (F 2 A)
8 Pilot lamp "Operator on"
9 Pilot lamp "Diaphragm pump on"
10 Switch box
11 Screw
12 Screw
13 Fuse (160 mA)

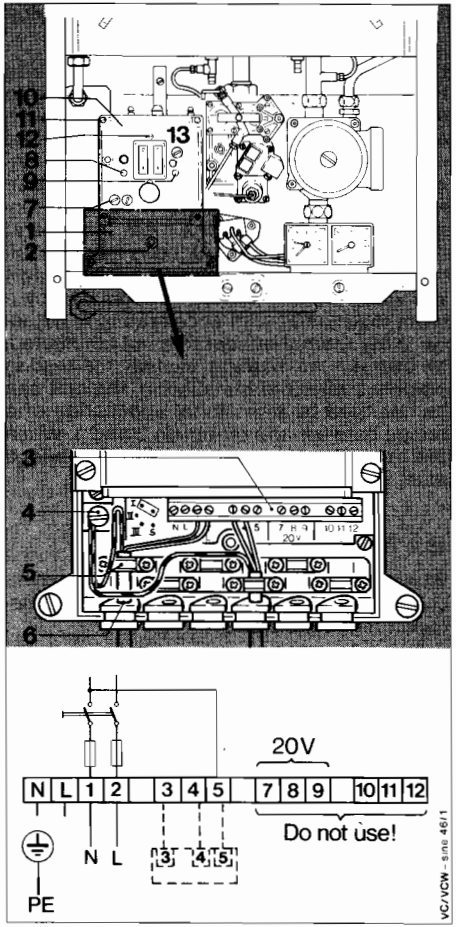

Fig. 21

Supplied by HeatingSpares247.com

10.1 Connection of Vaillant room thermostat (VRT 378)

Connection of room thermostat is made to the terminals 3 and 4. It is recommended to install a Vaillant room thermostat (VRT) with accelerating resistance (terminal 5). The room thermostat must be installed on an inner wall which is influenced neither by current of air nor by sun, in the living room. During the installation of the room thermostat the manufacturer's instructions must be followed. For the sake of economy and comfort the Vaillant boiler should be regulated by a room thermostat with accelerating resistance. If the room thermostat is not connected, to operate the heating system for testing purposes after the installation, the unit can be operated by provisional application of a bridge between the terminals 3 and 4. When the room thermostat is wired in this bridge must be removed.

10.2 Thermostatic radiator valves

Where TRV's and a clock are used the switching side of the clock is connected between terminals 3 and 4.

Where no clock is used a wire bridge must be inserted between terminals 3 and 4.

Set pump control to position II.

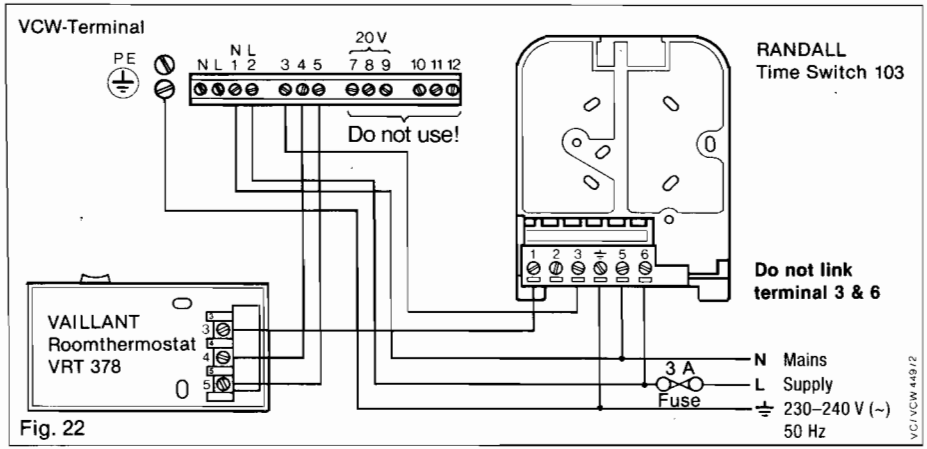

Fig. 22

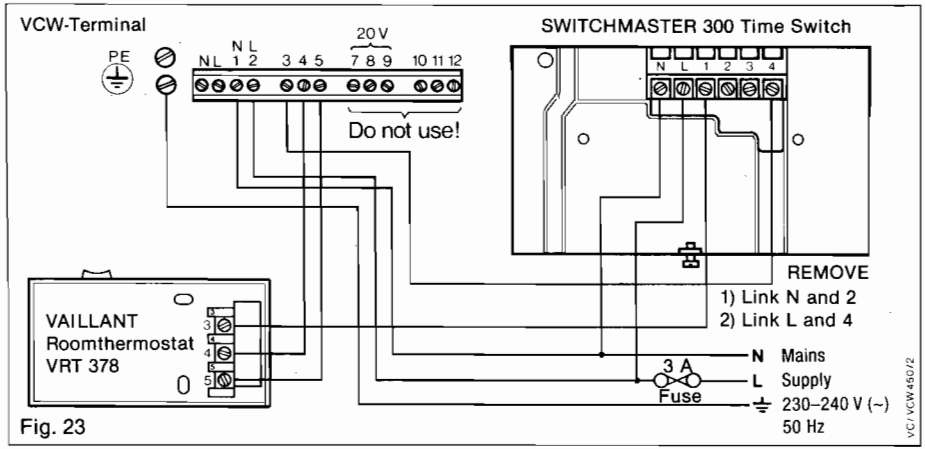

Fig. 23

Supplied by HeatingSpares247.com

Frost Protection

If a frost thermostat is fitted then it should be connected in parallel across terminals 3 & 4 on the boiler.

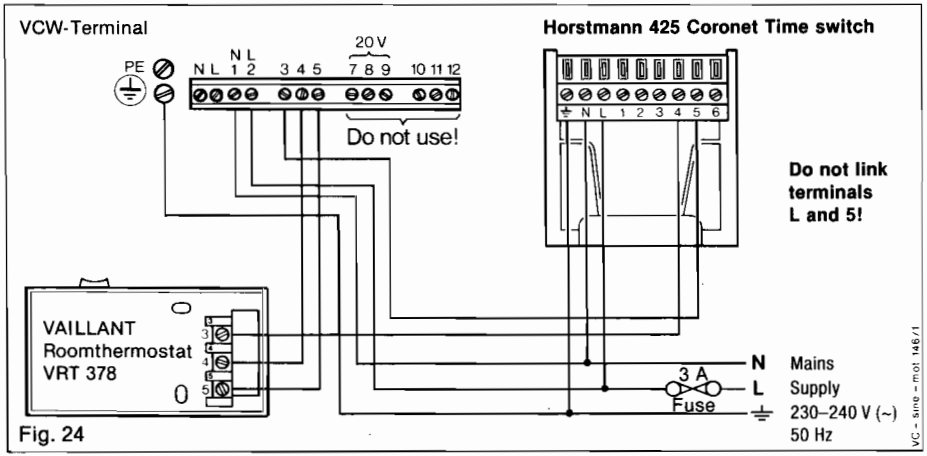

Fig. 24

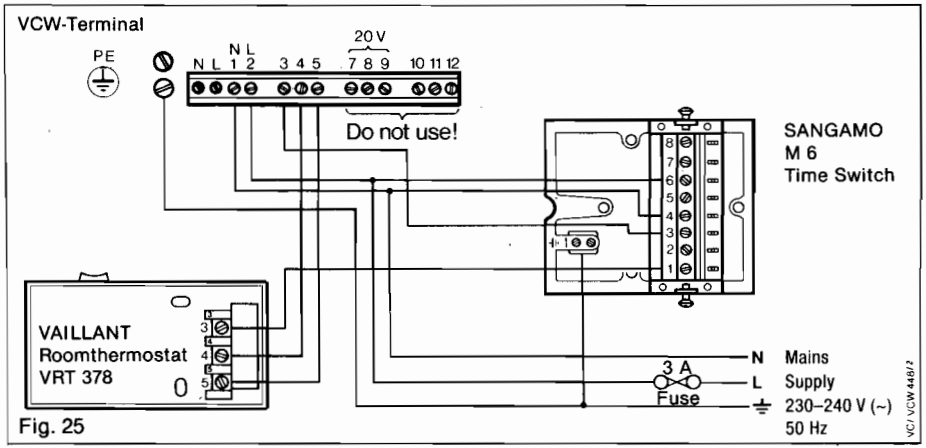

Fig. 25

Supplied by HeatingSpares247.com

CALOTROL - VRT 394

The Vaillant Room thermostat CALOTROL - VRT 394 includes a timer. The CALOTROL can operate in one of two modes.

A) Automatic temperature setback (Fig. 26) or
B) ON/OFF operation (Fig. 27)
with room temperature control.

CALOTROL - VRT 394 Timed Automatic set-back operation

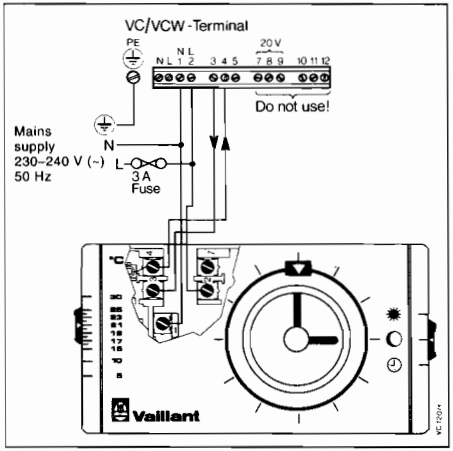

Fig. 26

CALOTROL - VRT 394 ON/OFF operation and room temperature control

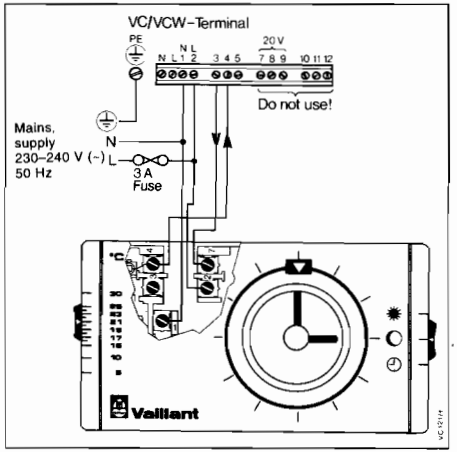

Fig. 27

Supplied by HeatingSpares247.com

10.3 Operating modes of the system water circulating pump

In the factory, the heating system pump is set to operating mode (I) (electrical connection to contact I — see Fig. 28).

By resetting the plug (1) to contacts I, II, III or S the following operating modes of the circulating pump become possible.

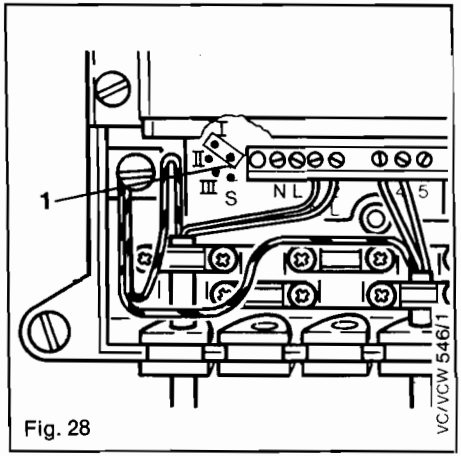

Fig. 28

Connection to:

Contact I: (as supplied)	The pump is controlled by the room thermostat (only when connection is made across terminals 3 and 4).
Contact II:	The pump is controlled by the flow thermostat (electronic) only. After switching off the burner by the control, a pump over-run device will leave the pump running for about 20 seconds.
Contact III:	The pump runs continously as long as the heating switch is on.
Contact S: (if fitted. This control is identified by the marking HY on the control box front cover)	The same as contact II but, after switching off the burner by the control, a pump over-run device will leave the pump running for about 5 min. (factory setting)

Supplied by HeatingSpares247.com

10.3.1 Reignition delay for the heating system

The appliance control incorporates a reignition delay to prevent rapid on-off cycling of the burner in the C.H. mode. This delay is factory set to 5 minutes.

On appliances which use a control box marked HY on the front cover, it is possible to change the re-ignition delay if necessary.

Remove the screw (2) to adjust the potentiometer, which is behind the screw.

Adjustment range: about 1-12 minutes.

If the time has been changed the over-run of the pump (connection S) will be also changed accordingly.

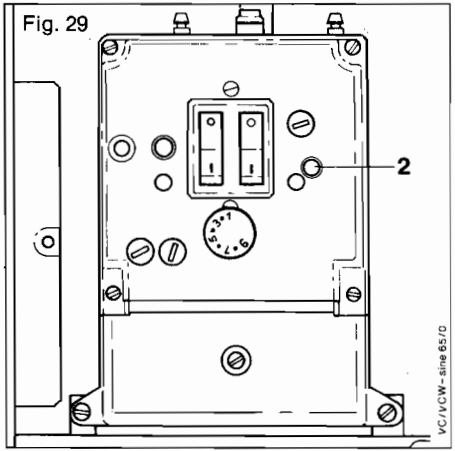

Fig. 29

Supplied by HeatingSpares247.com

Schematic appliance circuit diagram

VCW GB 221 H

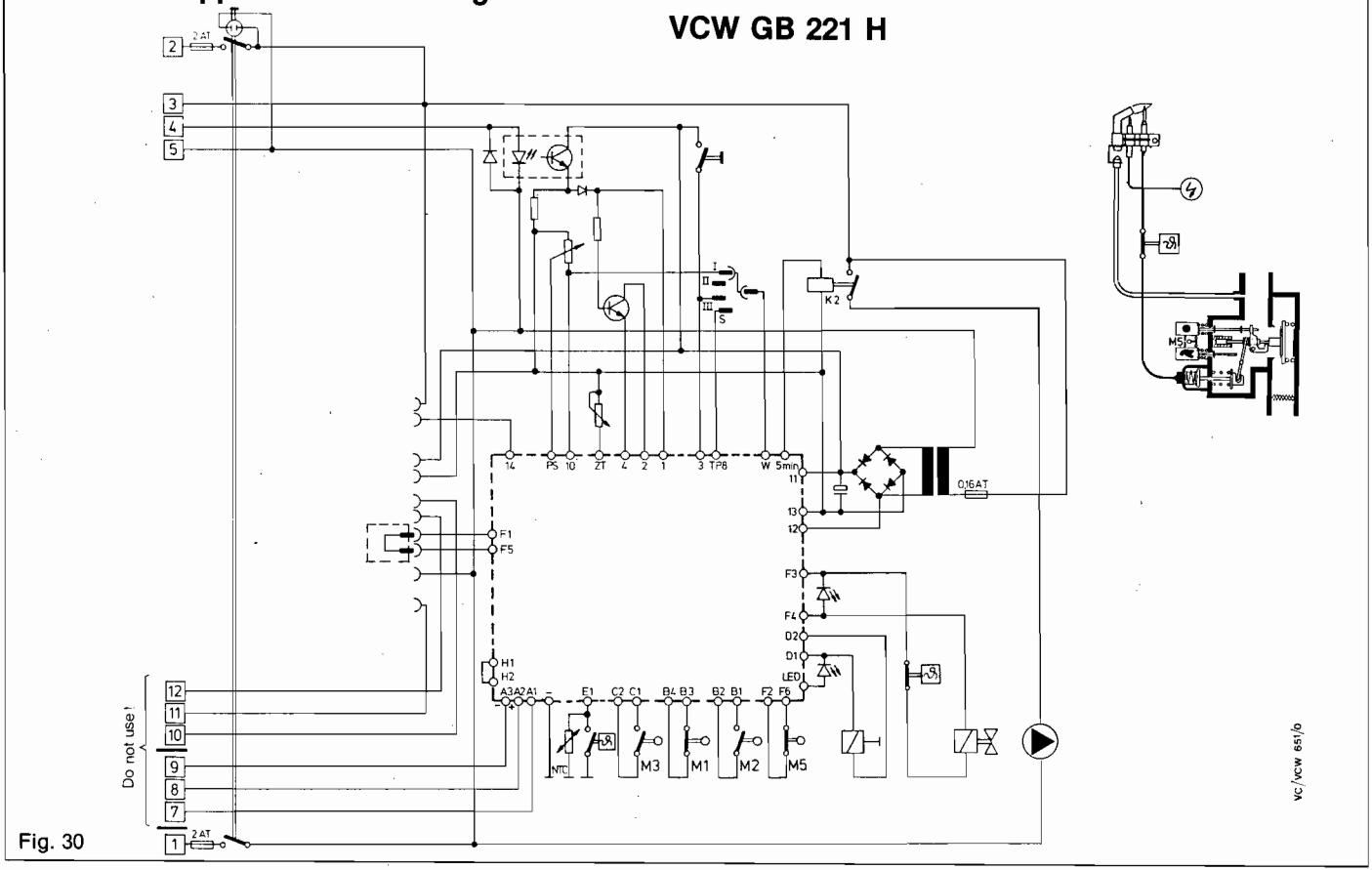

Fig. 30

Supplied by HeatingSpares247.com

11 Commissioning and testing

11.1 Electrical installation

Check the electrical installation by carrying out short circuit, earth continuity and resistance to earth tests and check for correct polarity.

11.2 Gas installation

The whole of the gas installation, including the meter, should be inspected and tested for soundness and purged in accordance with the recommendations of BS 6891.

11.3 Central heating system

The whole of the system must be flushed out with both cold and hot water. Ensure all valves at the system and the appliance service cocks are open.

Open the stop cock gradually at the filling point connection to the central heating system until water is heard to flow. Do not open fully.

The system should be filled and air locks cleared. Starting with the lowest radiator open each air release valve closing it only, when clear water, free of bubbles, flows out. In the same way release air from any high points in the pipework.

For venting the boiler, back off the screw on the heat exchanger (1, Fig. 31) (see 13.4 to gain access) and the circulating pump (2) by about 1–2 turns.

Fill the sealed system until the pressure gauge registers 1.5 bar (21.5 PSI).

After initial operation, once again drain the complete installation through the lowest point of the system to remove residues from the pipework.

In continuous operation, the appliance is vented automatically through the automatic air vent (3). It is for this reason **essential** that the cap (4) present on the top of the automatic air vent is **unscrewed** by about 1–2 turns and that it **remains** like that.

Check operation of pressure relief valve by lifting the lever or rotating the knob anticlockwise, where applicable. Release water from the system until the initial system pressure of 1.2 bar is attained.

11.4 Filling the domestic hot water circuit

Fill the domestic hot water circuit of the appliance.

a) Open the cold water stop valve (2) on the appliance.

b) Open the connected hot water tap (1) and draw water.

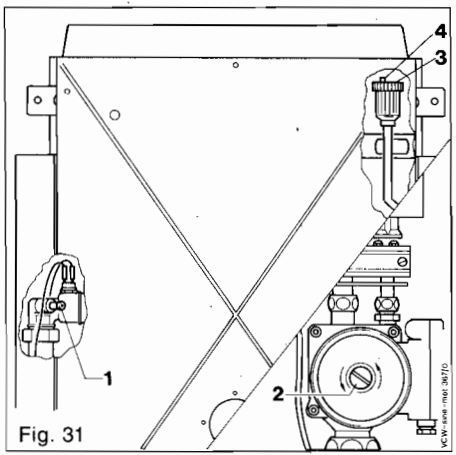

Fig. 31

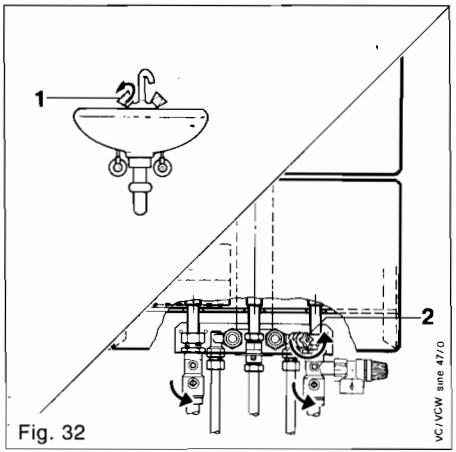

Fig. 32

Supplied by HeatingSpares247.com

11.5 Lighting the boiler

The first lighting of the appliance shall be done by a qualified fitter only. He shall also give clear verbal instructions to the user on how to operate the boiler, controls and systems generally as described separately in the "Instructions for use".
Turn on gas service cock. Ensure electrical supply is OFF.
Ensure external controls are calling for heat. Light the pilot by pressing in the lower button on the gas section (with flame symbol) and operating the knob on the piezo ignition. Continue pressing the button for 10 seconds after the pilot has been established. If difficulty is experienced in lighting the pilot, check that the gas supply has been purged.

If the pilot goes out after lighting, wait 3 minutes before attempting to relight.

Check shape of pilot flame in comparison to Fig. 33.
The pilot is not adjustable. If the pilot flame size appears incorrect, check that the gas supply is purged and that a 20 mbar gas inlet pressure is available at the appliance inlet.

11.6 Gas soundness

Test for gas soundness around the boiler gas components using leak detection fluid. In order to test the gas soundness of the burner gas connections, it is necessary to temporarily operate the main burner with the inner case front panel removed. Turn on the electrical supply to ignite the main burner. Test for gas soundness around the connections on the main burner, pilot burner and burner test point. Shut down the appliance and refit inner case front panel (see 13.4).

Warning: Do not operate the appliance with the inner case front panel removed for more than a few seconds. Ensure adequate room ventilation. Shut down the appliance and refit inner case front panel immediately after completing gas soundness checks. Ensure that the inner case front panel is correctly located over the top lip of the inner case and is fitted correctly to provide a good seal.

11.7 Test of flame supervision device (FSD)

With the pilot alight, disconnect the thermocouple connection to the gas section by unscrewing the retaining nut (TC, Fig. 56). The pilot flame should extinguish immediately. Reconnect the thermocouple connection to the gas section. Do not overtighten the retaining nut (TC, Fig. 56).
Wait for 3 minutes before relighting pilot.

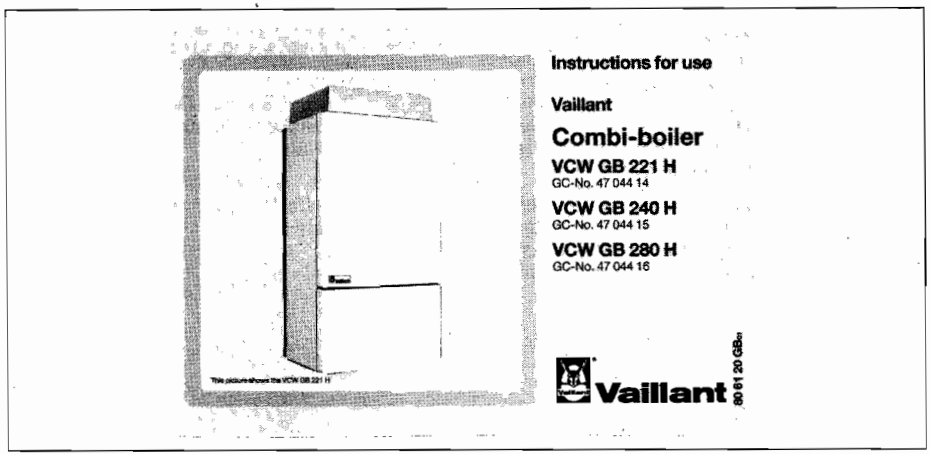

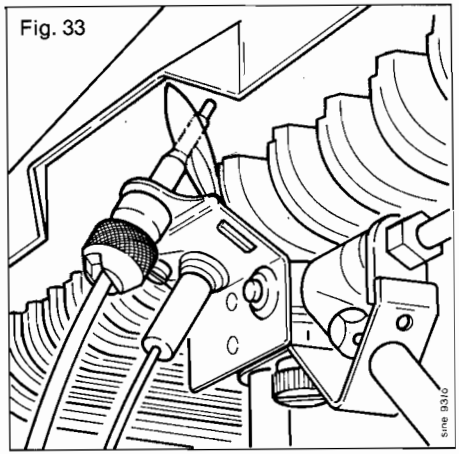

Supplied by HeatingSpares247.com

11.8 Gas pressure

11.8.1 Main burner pressure

The main burner gas pressure is factory set and sealed.

Therefore, it is not necessary to alter the setting during commissioning.

The main burner pressure can be checked by connecting a pressure gauge to the main burner test point (Fig. 34).

Operate the appliance by drawing D.H.W. at a high rate. This will generate the maximum burner pressure on the modulating burner which is 6.0 ± 0.5 mbar. (Note: The burner pressure will automatically modulate down when the D.H.W. operating temperature is reached).

If the burner pressure is incorrect initially check that a 20 mbar gas inlet pressure is available at the inlet to the appliance with the appliance operating. If the inlet pressure is less than 20 mbar, remedy external fault or contact Local Gas supplier. If the inlet pressure is correct at 20 mbar, contact Vaillant Ltd.

Note: The main burner pressure immediately after ignition (ignition rate) will be only 1.6 ± 0.5 mbar. After a few seconds of appliance operation, the main burner pressure will automatically increase to the maximum rate of 6.0 ± 0.5 mbar..

11.9 Flow thermostat

Allow the C.H. System to warm up and adjust the position of the flow thermostat to check that the burner modulates down from high to low and low to off and vice versa (scale range covers about 35 to 90 °C).

Note: The appliance control incorporates a re-ignition delay to prevent rapid on-off cycling in the C.H. mode. This delay can be by passed by briefly switching the main switch off and on again.

This allows the boiler to fire immediately if it is calling for heat.

11.10 Water soundness and final system flush

Allow the water system to reach maximum working temperature and examine for water soundness. The boiler should then be turned off and the C.H. system rapidly drained while still hot. The C.H. system should again be filled and cleared of air locks (see 11.3). Sealed systems should be adjusted to the initial system design pressure of 1.2 bar. The actual reading of the pressure gauge should ideally be 0.5 bar plus an additional pressure corresponding to the head of the highest point of the system above the base of the appliance, (10 m head equals an additional 1 bar reading on the pressure gauge), in any circumstances the minimum gauge reading should not be less than 1.0 bar. Finally set the red hand of the pressure gauge to 0.8 bar. Examine for water soundness.

Note: If the system is to be treated with an inhibitor it should be applied at this stage. Sentinel X100 is suitable for this purpose and should be applied in accordance with the manufacturers instructions.

Further information can be obtained from Sentinel, Grace Dearborn Ltd., Tel.: 0151 495 1861.

11.11 Terminal duct assembly

Check visually the installation and function of the terminal duct assembly.

11.12 Assemble appliance case

(see chapter 12)

11.13 User's instructions

Hand the instructions for use to the user for retention and instruct in the safe operation of the appliance. Advise the user of the precautions necessary to prevent damage to the system and to the building if the system does not remain operative during frost conditions.

Finally, advise the user that for continued efficient and safe operation, this Vaillant appliance should be serviced at least once a year by a qualified servicing company. It is important and strongly recommended that arrangements are made for a MAINTENANCE AGREEMENT with a qualified servicing company to ensure regular servicing.

Please contact
Vaillant Service Department
(Freephone 0800 31 80 76)
for further details.

Note: Leave installation and servicing instructions with the user when the installation is completed.

Supplied by HeatingSpares247.com

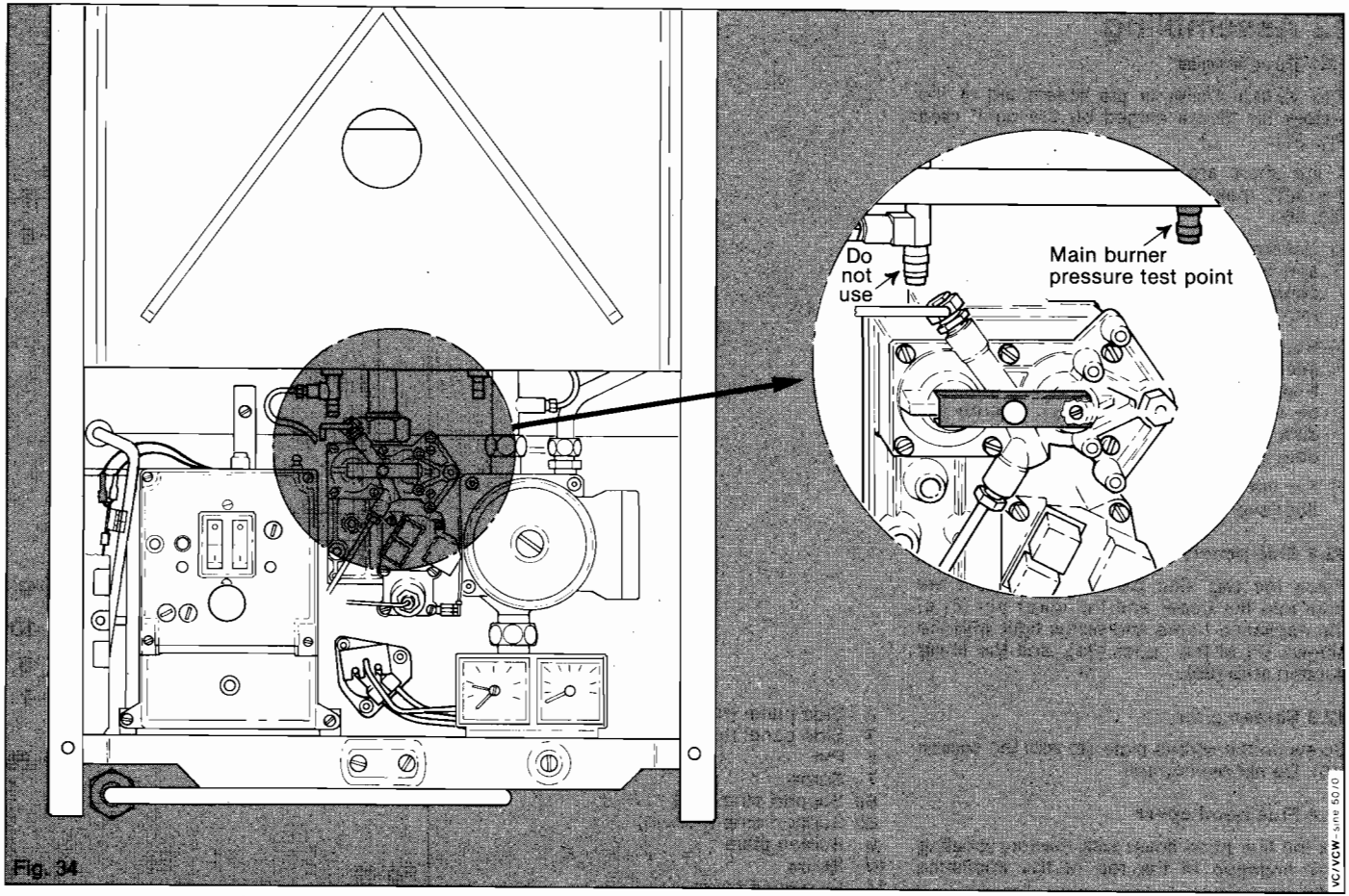

Fig. 34

Supplied by HeatingSpares247.com

12 Assembling

12.1 Door hinges

The Vaillant boiler is pre-assembled in the factory for "doors hinged on the right" (see Fig. 36).

If the doors are required to be "hinged on the left", make the following changes (see Fig. 36).

a) Unscrew door hinges top (1a), centre (1b) and bottom (1c) from the right-hand side panel (2) and screw them the other way round to the left-hand side panel (3).

b) Remove name plate from the upper appliance door, rotate it through 180° and refit. Engage upper door in the hinges mounted on the left hand side panel. Secure the door by screwing hinge bolt into appliance door guide (1a, fig. 36).

c) For the installation of the lower appliance door see next page. (12.5, Fig. 36).

12.2 Side panels (Fig. 35)

Place the two side panels (2, 3) from the front into the upper and the lower pin (6) of the appliance frame and screw tight with the screws (7) at the upper (8a), and the lower support strip (8b).

12.3 Screen plate

Screw on the screen plate (9) with the screws (10). Do not overtighten.

12.4 Flue hood cover

Fix the flue hood cover with the four locating pins engaged in the top of the appliance case.

2 Side panel (right-hand)
3 Side panel (left-hand)
6 Pin
7 Screw
8a Support strip (top)
8b Support strip (bottom)
9 Screen plate
10 Screw
14 Flue hood cover

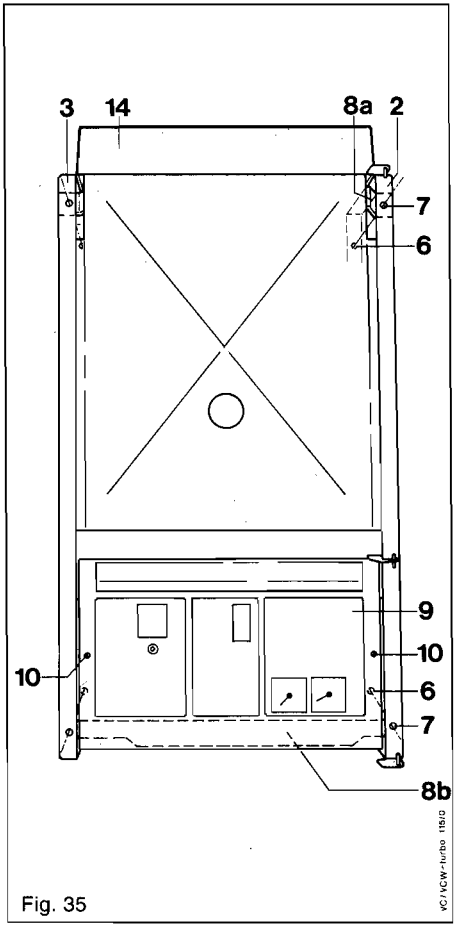

Fig. 35

Supplied by HeatingSpares247.com

12.5 Upper appliance door

a) Engage upper appliance door (5) in the door hinge (1 b).

b) Screw the hinge bolt of the upper door hinge (1 a) into the appliance door guide.

12.6 Lower appliance door

a) Engage lower appliance door (12) in the door hinge (1 b).

b) Screw the hinge bolt of the lower door hinge (1 c) into the appliance door guide.

12.7 User operating instructions label

IMPORTANT

Position and fix self adhesive
— user instructions
— wiring diagram
to the inner side of the door as shown on Fig. 36.

Ensure all surfaces are cleaned before affixing labels.

1 a,b,c Door hinges
2 Side panel (right-hand)
3 Side panel (left-hand)
4 Magnet
5 Appliance door (top)
12 Appliance door (bottom)
13 Magnet holder

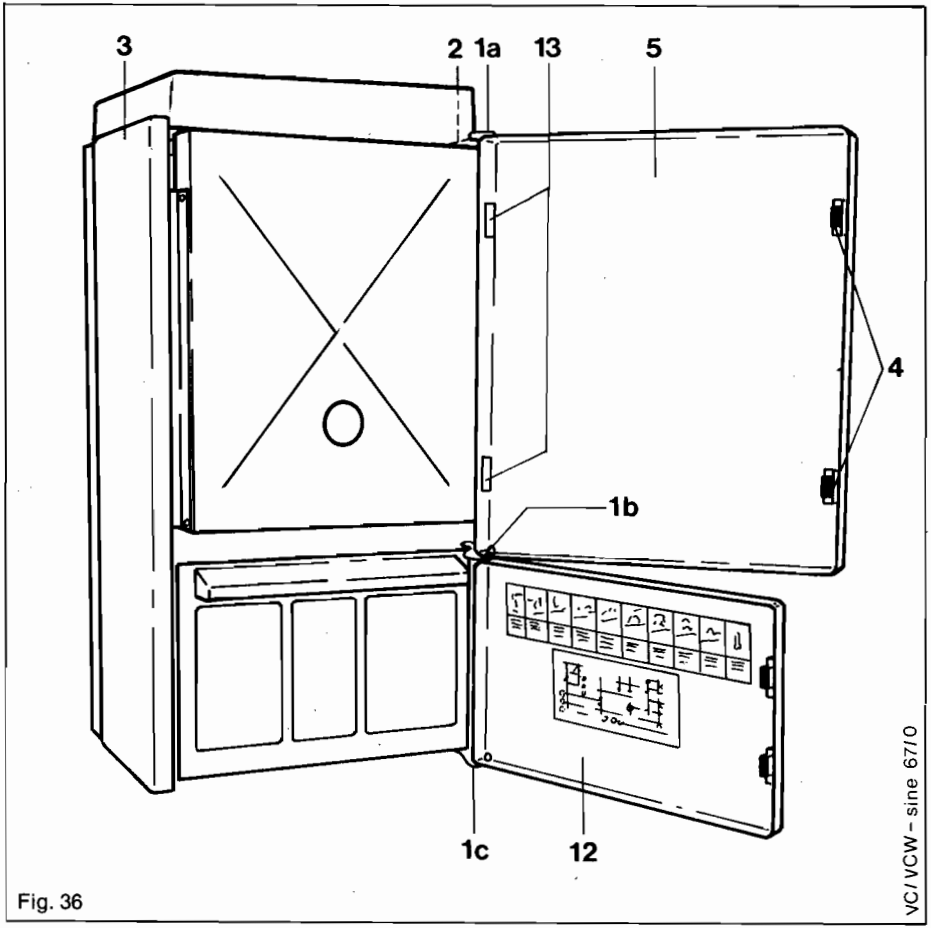

Fig. 36

Supplied by HeatingSpares247.com

13 Servicing of boiler

To ensure the continued safe and efficient operation of the boiler it is recommended that it is checked and serviced as necessary at regular intervals. The frequency of servicing will depend upon the particular installation conditions and usage, but in general once per year should be adequate. It is law that all servicing work is carried out by a competent person (Corgi registered).

The data plate is located on the underside of the inner case (8, fig. 11).

IMPORTANT

Warning:
Before starting any maintenance work, switch OFF the mains electricity supply and disconnect the plug at the main isolating switch and socket. (If a switch is used, remove the fuse).

Turn OFF gas supply at the gas service cock fitted to the appliance. Always test for gas soundness after any service work and after exchanging any gas carrying component and always carry out functional checks.

Always after any service work and after exchanging any electrical component.

Check – earth continuity
– polarity
– resistance to earth.

To service the boiler follow the sequence 13.1 to 13.9

13.1 Inspection

13.1.1 Inspect exterior of the boiler, in particular the pipework, electrical connections and flue assembly for indications of damage or deterioration.

13.1.2 Inspect the air supply and ventilation arrangements of the installation ensuring that the requirements of 5.5 and 5.6 are met.

13.1.3 Operate the appliance by drawing off DHW at a high rate and inspect the burner operation through the viewing window. Check that the flames are of light blue colour and over all burner ports. Inspect for signs of yellowing, excessive lifting or sooting.

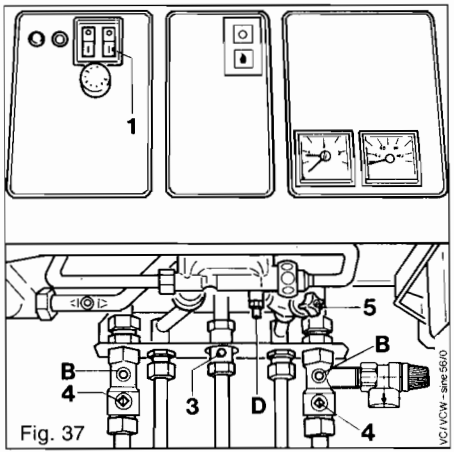

Fig. 37

13.2 Turning of the boiler

– Isolate the electrical supply to the boiler
– Turn off gas service cock (3, fig. 37)
– Turn off boiler C.H. service cocks (4, fig. 37)
– Turn off DHW cold water service cock (5, fig. 37)

Supplied by HeatingSpares247.com

13.3 Removing outer case (Fig. 35)

Remove upper door by unscrewing hinge pin (1a) and pulling door out and up. Remove lower door by unscrewing hinge pin (1c) and pulling door out and down.

Remove screen plate by unscrewing the two fixing screws (10, Fig. 35).

Lift off flue hood cover (14, Fig. 35).

Remove side panels by unscrewing top and bottom screws (7, Fig. 35) to clear internal clips and then pulling panels outwards and off.

13.4 Removing inner case

Remove screw (A, Fig. 38)
Release the two clips (B) securing the bottom edge of the inner front panel by pressing spring clips upwards. Lift bottom edge of front panel outwards and unhook from the top of the inner case. Inspect the case seal - if damaged, obtain a replacement case panel.

Important
When replacing the inner case front panel it is essential that the panel is correctly fitted and a good seal obtained. Check that the top edge of the panel is correctly hooked over the top of the inner case.

13.5 Removing inner case top panel (Fig. 39)

Remove 8 screws (S, Fig. 39).
Lift away inner case top panel.

Fig. 38

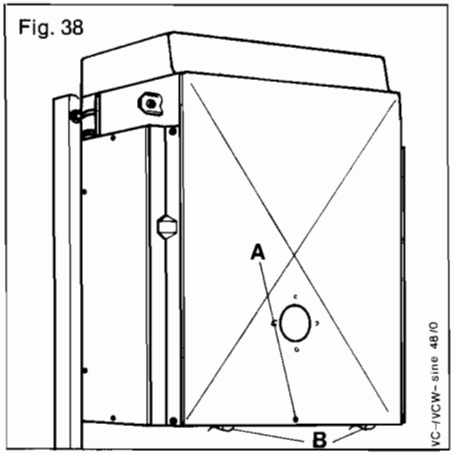

Fig. 39

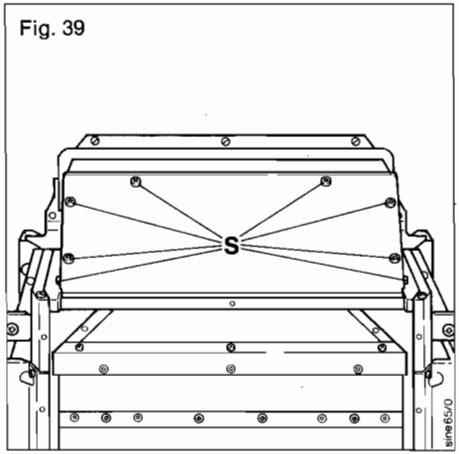

Supplied by HeatingSpares247.com

13.6 Cleaning of burner (Fig. 40)

Disconnect both ends of the burner test point extension (E) and remove.

Remove the thermocouple from the pilot assembly by unscrewing the retaining nut (RN, Fig. 40) and pulling thermocouple downwards. Remove the electrode from the pilot assembly by removing screw (FS, Fig. 40).

Disconnect the pilot gas supply pipe from the pilot assembly (UN, Fig. 40).

Remove the four screws (S).

Lift LH burner vertically upwards a few millimetres to disengage from the burner bar. Remove burner downwards and out taking care to avoid distorting the pilot gas supply pipe.

Lift RH burner vertically upwards a few millimetres to disengage from the burner bar. Slide burner to the LHS of the combustion chamber and remove downwards and out taking care to avoid distorting the pilot gas supply pipe.

Remove burner bar fixing screws (BS). Remove burner bar by easing forward (BB).

Clean burners and injector nozzles with a soft brush or a vacuum cleaner.

Remove pilot injector as under 14.3. Clean pilot injector with a soft brush. Clean pilot mixing tube with a vacuum cleaner.

13.7 Cleaning of main heat exchanger

Place cloth below combustion chamber.

Remove inner case top panel as under 13.5.

Remove fixing screws (FS) and take off cover sheet (CS, Fig. 41).
Disconnect flue hood from the flue extension piece by unscrewing the two screws (1, Fig. 42) and sliding the flue extension piece rearwards away from the flue hood.

Remove the two screws securing the flue hood to the appliance back panel (2, Fig. 42).

Lift the flue hood vertically upwards and then slide forwards to remove.

Inspect top and bottom of heat exchanger using a torch and clean if necessary with a stiff long bristle brush.

Reassemble in reverse order.

Fig. 40

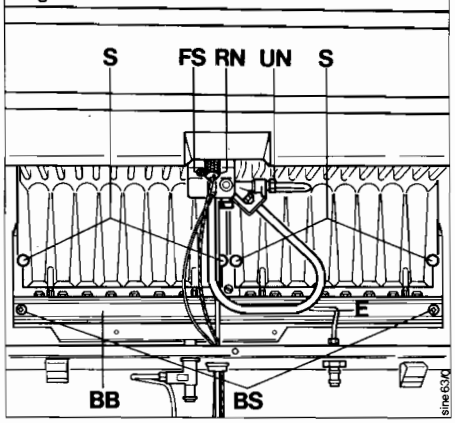

Fig. 41

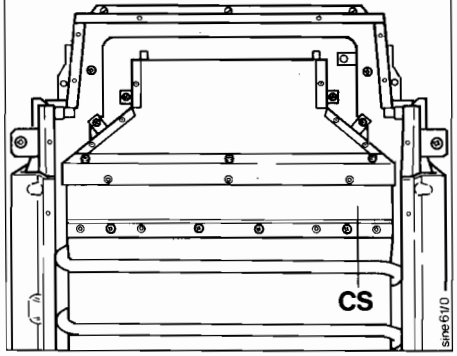

Fig. 42

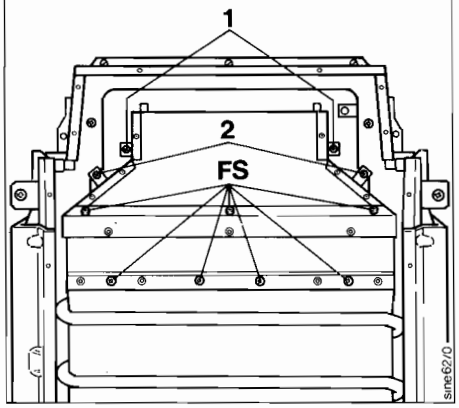

Supplied by HeatingSpares247.com

13.8 Check of C.H expansion vessel

Close C.H. service cocks (4, Fig. 37)

Release pressure from the appliance as described in 14.24.

Remove protective cap.

Check internal pressure of expansion vessel which should be 0.7 to 0.9 bar. (Fig. 43), access from underneath the appliance. Repressurise the expansion vessel as necessary using an air pump.

Open C.H. Service cocks and repressurise C.H. System if necessary.

(See appropriate paragraphs of 11.10)

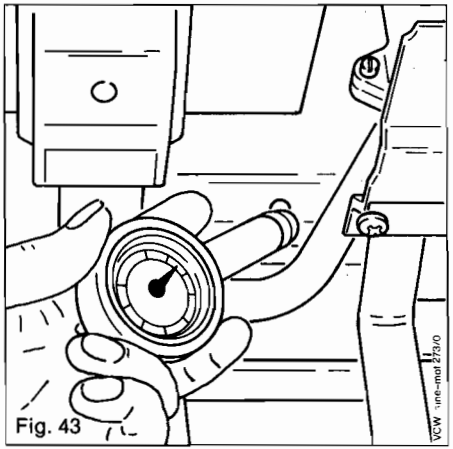

Fig. 43

13.9 Recommissioning the appliance

a) Reconnect electrical supply
b) Turn on gas service cock
c) Operate burner with inner case front panel removed in order to test gas soundness of main burner, pilot burner and burner test point connections (11.6)
d) Refit inner case front panel. Ensure the panel is correctly fitted and a good seal is obtained (13.4)
e) Light the boiler (11.5)
f) Check gas soundness of remaining gas connections (11.6)
g) Check gas pressure (11.8)
h) Test flame supervision device (11.7)
i) Test C.H. flow thermostat (11.9)
j) Check water soundness (11.10)
k) Check flue duct assembly (11.11)
l) Carry out electrical test (11.1)
m) Refit outer case (12)

Supplied by HeatingSpares247.com

14 Replacement of parts

General

Before starting any replacement of parts, switch OFF the main electricity supply and disconnect the plug at the main isolating switch and socket. (If a switch is used, remove the fuse).

Turn off gas supply at the gas service cock. Always test for gas soundness after any service work and after exchanging any gas carrying component.

Always carry out functional checks.

After breaking any internal electrical circuit check – earth continuity
– polarity
– resistance to earth.

14.1 Change of electrodes

For general access, remove outer case and inner case as under 13.3 and 13.4.

Remove screw securing the electrode to the pilot assembly. Disconnect the high tension lead at the cable joint between the electrode and the piezo ignitor (snap connector) and remove electrode.

Reassemble in reverse order.

14.2 Change of thermocouple (Fig. 44)

For general access remove outer and inner case as under 13.3 and 13.4.

Disconnect the thermocouple retaining nut (RN) and pull the thermocouple downwards from its location in the pilot assembly.

Disconnect the other end of the thermocouple cable from the C.H. overheat thermostat (push on connector). Release the thermocouple cable carefully from the rubber grommet in the base of the combustion chamber.

Reassemble in reverse order.

14.3 Change of pilot injector (Fig. 45)

For general access remove outer and inner case as under 13.3 and 13.4. Remove screw (S) and take off pilot mixing tube. Unscrew pilot injector (PI). Reassemble in reverse order.

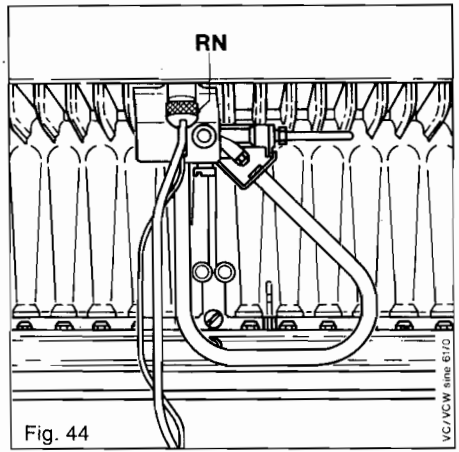

Fig. 44

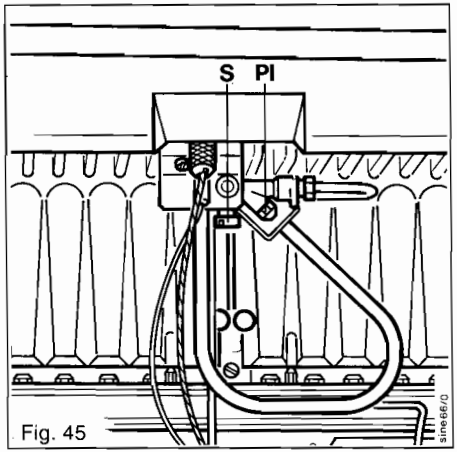

Fig. 45

Supplied by HeatingSpares247.com

14.4 Change of NTC resistor (Fig. 46)

Remove outer and inner case as under 13.3 and 13.4.

Disconnect the push on connector and unscrew the NTC probe.

Reassemble in reverse order.

14.5 Change of automatic air vent (Fig. 47)

Remove outer case as under 13.3

Release system pressure as under 14.24.

Unscrew the automatic air vent by hand. Reassemble in reverse order, screwing in the automatic air vent by hand only.

Disconnect vent pipe connection on pump body to gain access if necessary.

Open the locking cap (LC) of the automatic air vent by 1—2 turns.

Reassemble casing in reverse order and repressurise system.

14.6 Change of diverter valve or parts

14.6.1 Electrical isolation (Fig. 48)

Remove outer case as under 13.3

Ensure the appliance is isolated from the electrical mains. Pull off the plug (S1) by shifting the retaining tongues' (S2) top and bottom to the side.

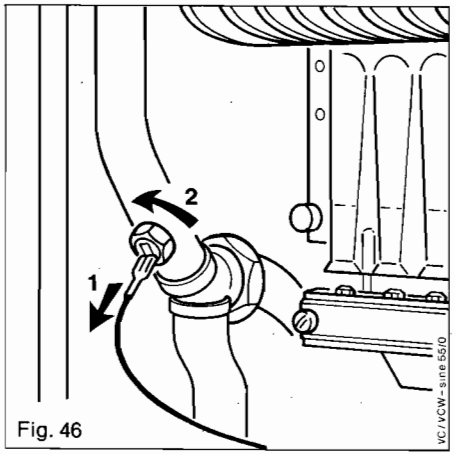

Fig. 46

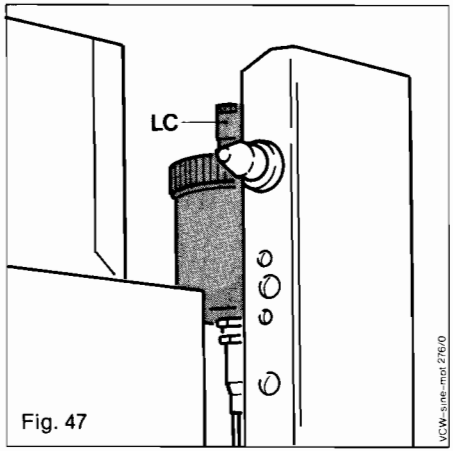

Fig. 47

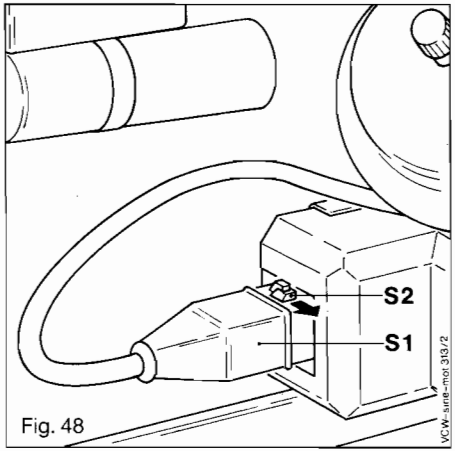

Fig. 48

Supplied by HeatingSpares247.com

14.6.2 Change of diverter valve microswitches (Fig. 49)

Spring off the protective cover (S6).

Unscrew two retaining screws (RS, Fig. 51) securing complete microswitch assembly. Remove complete assembly.

Remove screws (S7) or (S8) as appropriate, take off microswitch and remove the two push on connectors.

Reassemble in reverse order, adjust the actuating lever as under 14.6.3.1.

Note:
The black cables are connected to microswitch S7. The brown and blue cables are connected to microswitch S8.

14.6.3 Removal of complete diverter valve (Fig. 50)

Carry out operation 14.6.1.
Drain the C.H. side of the appliance (14.25).
Remove D.H.W. expansion vessel (14.12.1).
Mark and disconnect the control lines (CL).

Note:
The bolt which secures the control line banjo connection contains a restrictor orifice. Check this orifice is clear.

Remove the three unions (U).
(If access to the L.H. union is restricted, leave this union undisturbed and disconnect pipe from D.H.W. heat exchanger. Withdraw diverter valve together with pipe carefully. Take care when reassembling not to overtighten the union connection to the D.H.W. heat exchanger. Ensure threads are correctly engaged.)

14.6.3.1 Change of diverter valve stuffing box (Fig. 51)

Carry out operation (14.6.1)
Carry out operation (14.6.3) to remove the complete diverter valve.
Spring off protective cover (C).
Unscrew two retaining screws (RS) and remove complete microswitch assembly.
Unscrew stuffing box and replace using a new washer. Reassemble in reverse order and adjust actuating lever as follows:
Turn down spindle (1) slowly until microswitch closes the blue to brown circuit and make ⅔ more turn down. Press the lever assembly down to the rest and turn down spindle (2) slowly until microswitch closes the black to black circuit and make 1½ more turns down.

Lock spindles with locking nuts (3).

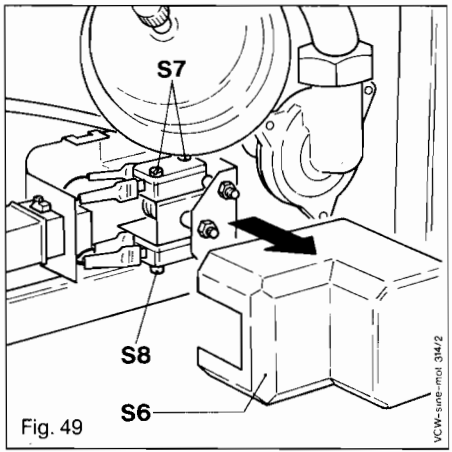

Fig. 49

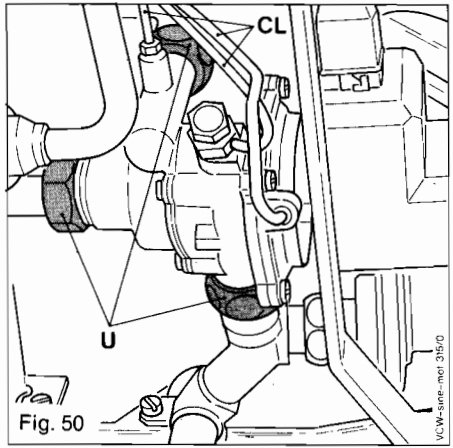

Fig. 50

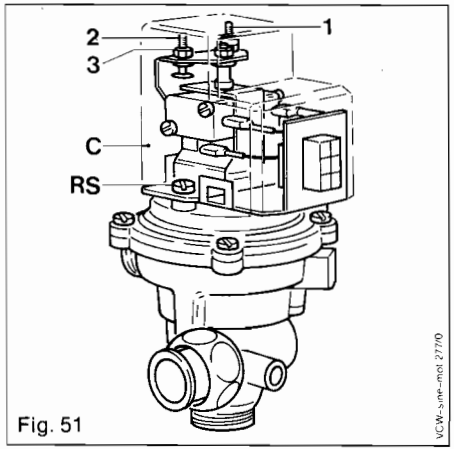

Fig. 51

Supplied by HeatingSpares247.com

14.6.3.2 Change of diaphragm (Fig. 52)

Carry out operation 14.6.1.

Carry out operation 14.6.2 and 14.6.3 to remove complete diverter valve and micro-switch assembly.

Note position of the housing (H) and the diaphragm (D).

Remove the retaining screws (RS).

Check diaphragm disk (DD) for free movement. Reassemble in reverse order.

14.6.3.3 Change of internal parts (Fig. 53)

Carry out operation 14.6.1.

Carry out operation 14.6.3 to remove complete diverter valve.

Unscrew carefully the three retaining screws (RS), remove housing and change if necessary O-ring seal. Do not use any jointing compound or grease.

Check valve (V) and replace if necessary. Reassemble in reverse order.

14.6.4 Reassembling

Reassemble in reverse order, using new washers.

Check – earth continuity
– polarity
– resistance to earth.

Note: position of notches on plug as shown. (Fig. 54)

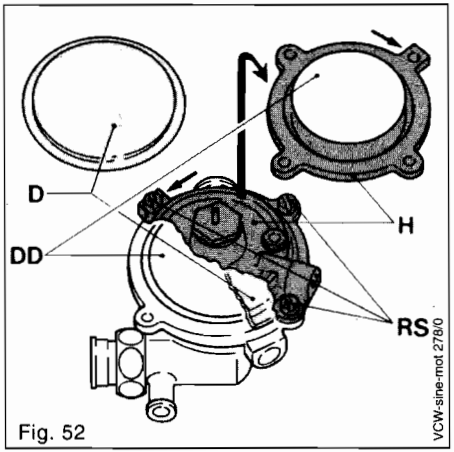

Fig. 52

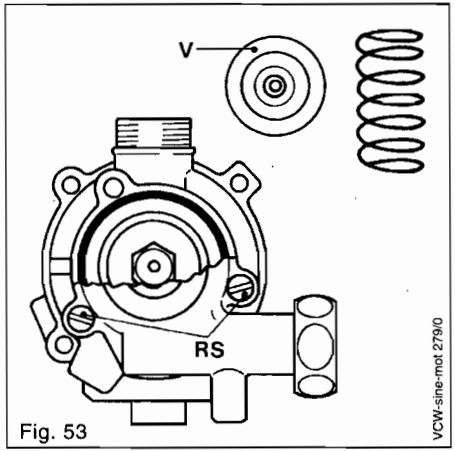

Fig. 53

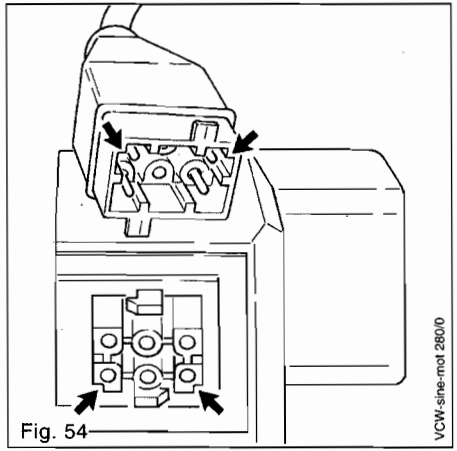

Fig. 54

Supplied by HeatingSpares247.com

14.7 Gas section

Access to the gas section can be improved by removing the retaining screws (RS, Fig. 58) and pulling the control box forward. Take care to ensure that the 2 plastic pipes on the back of the control box are not pulled off.

14.7.1 Change of operator (Fig. 55)

Turn off boiler as under 13.2
Remove outer case as under 13.3.
Isolate the appliance from the electrical mains and pull off the cable connectors (P, Fig. 56) from the operator (O). Disconnect the control lines (CL) by unscrewing retaining bolt (RB) and union nut (UN). Unscrew the four retaining screws (RS). Reassemble in reverse order using new gasket (G). Check for gas soundness. Carry out electrical checks (11.1). Check burner pressure (11.8).

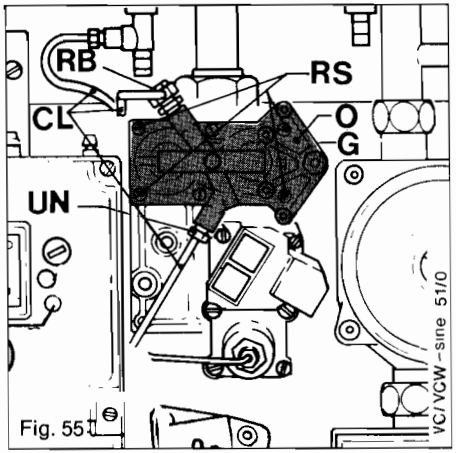

Fig. 55

14.7.2 Change of gas section (Fig. 56)

Turn off boiler as under 13.2.
Remove outer case as under 13.3.
Isolate the appliance from the electrical mains and pull off the connectors (P) from the operator (O). Disconnect the two inline cable connectors in the black leads to the gas section. Disconnect the two control lines (CL) by unscrewing the retaining bolt (RB) and the union nut (UN).
Disconnect the pilot gas supply pipe from the gas section (PC).
Disconnect the thermocouple cable from the gas section (TC).
Remove the two retaining screws (RS) and loosen the sleeve nut (SN).
Reassemble in reverse order using new washers.
Check connections for gas soundness.

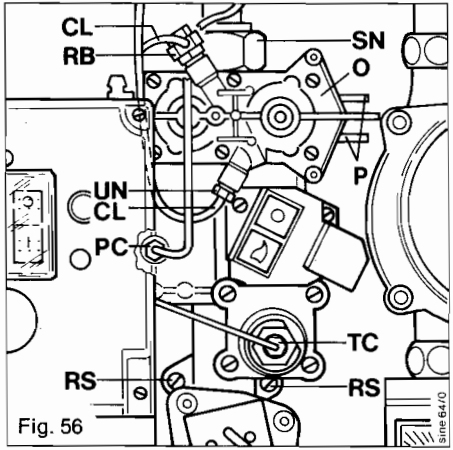

Fig. 56

Carry out electrical checks (11.1).
Check function of flame supervision device (11.7).
Check burner pressure (11.8).

Supplied by HeatingSpares247.com

14.8 Change of pump (Fig. 57)

Turn off the appliance 13.2.

Remove outer case as under 13.3.

Remove inner case as under 13.4.

Drain C.H. side of appliance (14.24 and 14.25).

Open terminal box of the pump.

Note the colour code of wiring and disconnect cable.

Unscrew the sleeve nut (SN) of the air vent pipe.

Unscrew the two unions (U) of the pump.

Reassemble in reverse order using new washers and repressurise system.

Carry out electrical checks (11.1).

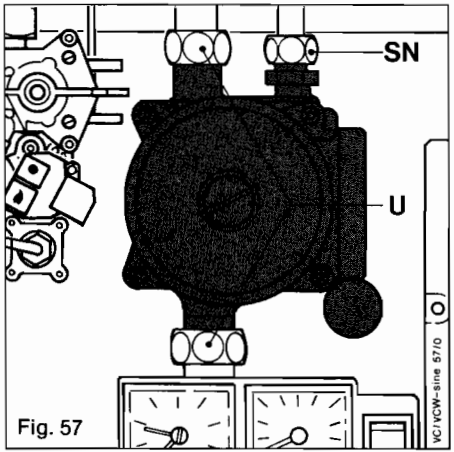

Fig. 57

Supplied by HeatingSpares247.com

14.9 Control box

14.9.1 Opening control box (Fig. 58)

Remove outer case as under 13.3.

Isolate the appliance from the electrical mains. Open the terminal box by removing the retaining screw (TS). Mark the wiring and remove it from the terminal block. Remove the four retaining screws (BS). Pull out slowly the control box cover complete with the switch board and printed circuit boards.

Pull off the multiple plugs from the PC boards. Reassemble the control box in reverse order.

When replacing the screws, position the star washer under the left lower screw.

14.9.2 Change of thermostat circuit board (T.C.B.) (Fig. 59)

Take off control box cover as under 14.9.1. Pull off temperature selector knob.

Unscrew the two retaining screws (RS) or push out the plastic retaining clips (where fitted) and remove T.C.B. from main switch circuit board by lifting up.

Reassemble in reverse order.

Carry out electrical checks (11.1).

Check operation of C.H. flow thermostat (11.9).

14.9.3 Change of main switch circuit board (M.S.C.B.) (Fig. 60)

Carry out operations 14.9.1, 14.9.2.

Unscrew the two retaining screws (RS).

Unscrew the two retaining screws securing the switches.

Reassemble in reverse order.

Carry out electrical checks (11.1).

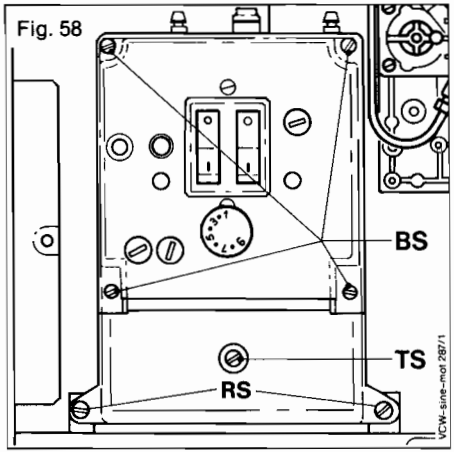

Fig. 58

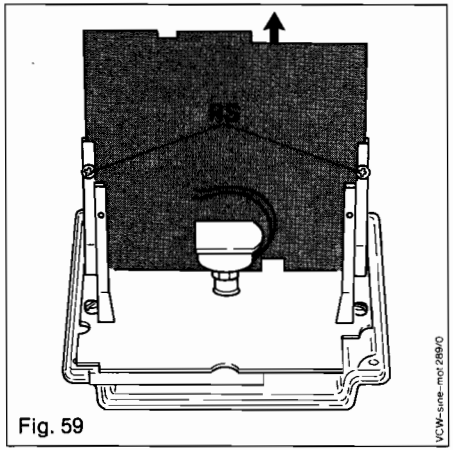

Fig. 59

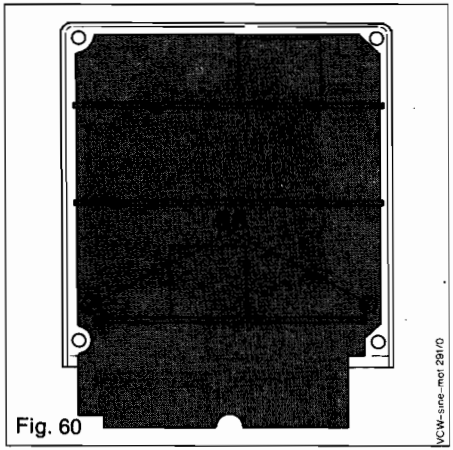

Fig. 60

Supplied by HeatingSpares247.com

14.9.4 Change of diaphragm pump (Fig. 61)

Remove outer case as under 13.3.

Isolate the appliance from the electrical mains. Open the main terminal box (screw TS, Fig. 62).

Unscrew the retaining screws (RS, Fig. 62). Unscrew two retaining screws behind terminal box cover and remove diaphragm pump cover. Pull out complete control box to the front.

Mark and disconnect plastic hoses (PH) and push on connectors (AP).

Pull out diaphragm pump with rubber legs (RL) from control box bottom.

If necessary, access to the rubber legs inside the control box can be achieved by sliding out the control box cover completely with printed circuit boards (14.9.1).

Reassemble in reverse order.

Carry out electrical checks (11.1).

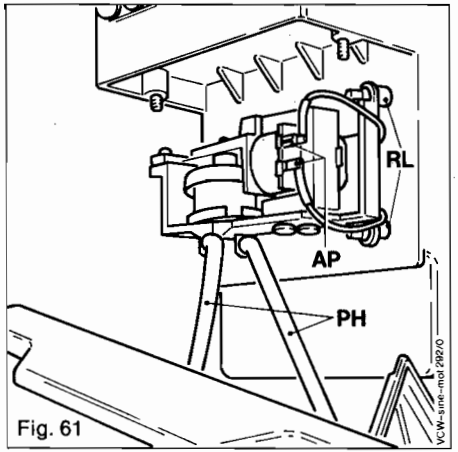

Fig. 61

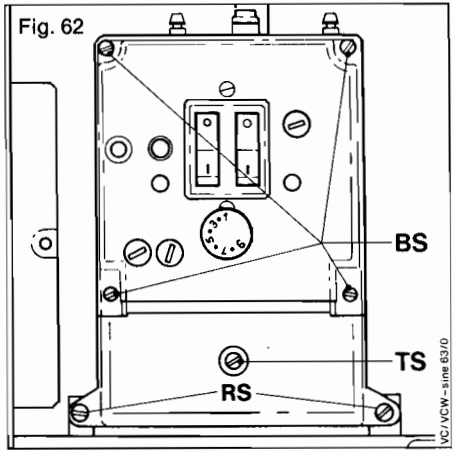

Fig. 62

Supplied by HeatingSpares247.com

14.10 Change of main heat exchanger overheat thermostat (Fig. 62a)

Turn off the boiler as under 13.2

Remove outer and inner case as under 13.3 and 13.4.

Remove the L.H. side panel of the inner case (6 screws, RS).

The thermostat is situated on the top LHS of the main heat exchanger.

Disconnect the two push-on cable connectors from the thermostat (TS).

Unscrew the thermostat.

Reassemble in reverse order.

Do not overtighten the thermostat.

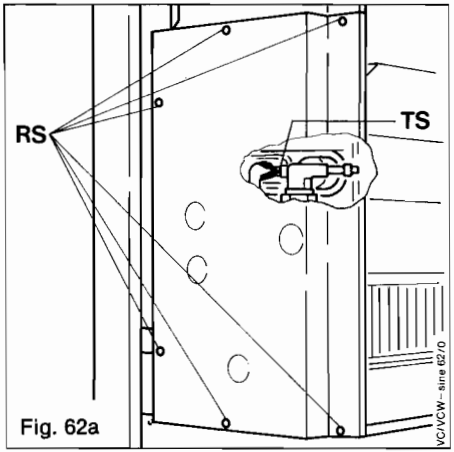

Fig. 62a

Supplied by HeatingSpares247.com

14.11 Removal of servo control valve assembly (Fig. 63)

Turn off the boiler (13.2).

Remove outer and inner case as under 13.3 and 13.4.

Drain the boiler as under 14.24 and 14.25.

Slacken union nuts (M, fig. 64) and collect water in suitable container.

Note the connections of the four control lines (CL1 and CL2) to the servo control valve. Note the connections of the other ends of these control lines. Remove clamp (C1) by sliding upwards. Remove clamp (C2) by sliding outwards. The control lines are a push fit into the servo control valve. Disconnect the control line (CL1) from the servo control valve by gently pulling outwards. Remove control lines (CL2) from servo control valve. (Disconnect connections at other ends of control lines to gain movement as necessary. Ensure all connections are noted to assist reassembly).

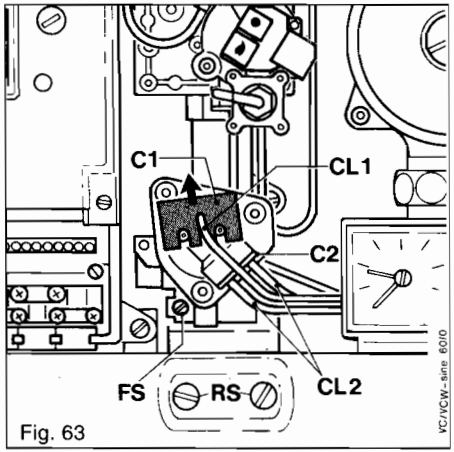

Fig. 63

Unscrew the four union-nuts on the water section (M and N, fig. 64).

Remove the two retaining screws (RS, Fig. 63) securing the mounting bracket to the front of the appliance.

Remove the other two screws securing the bracket from underneath the appliance.

Remove the complete assembly downwards. Note position of cable connectors on the DHW micro switch and disconnect.

Reassemble in reverse order using new sealing washers.

Check – earth continuity
– polarity
– resistance to earth.

Supplied by HeatingSpares247.com

14.11.1 Change of servo control valve assembly (Fig. 63)

Remove complete assembly as under 14.11.

Separate the servo control valve assembly from the water section by removing fixing screw (FS, Fig. 63) and sliding bracket sideways. Replace servo control valve assembly and replace fixing screw (FS, Fig. 63). Check adjustment of servo control valve (14.11.4).

Reassemble in reverse order.

Carry out electrical checks (11.1).

14.11.2 Change of D.H.W. microswitch (Fig. 66)

Remove complete assembly as under 14.11.

Remove the two retaining screws (5), taking care not to loose the nuts.

Replace D.H.W. microswitch and check adjustment (14.11.4).

Reassemble in reverse order.

Carry out electrical checks (11.1).

14.11.3 Cleaning of water section (Fig. 64)

Turn off boiler as under 13.2.
Remove outer case as under 13.3.
Slacken union nuts (M, Fig. 64) and collect water in suitable container.
Remove water section by unscrewing water conections (M and N, Fig. 64) and loosening screw L.
Remove five screws securing the two halves of the water section, note position of components and separate.

Check diaphragm (P, Fig. 65) and replace if necessary. Clean water filter (Q, Fig. 65).
Check stuffing box and replace if necessary.
Reassemble in reverse order using new washers.

Note: If the complete water section is replaced it is necessary to check the adjustment of the servo control valve as under 14.11.4.

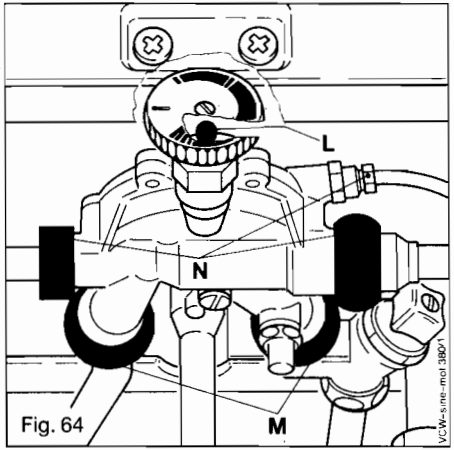

Fig. 64

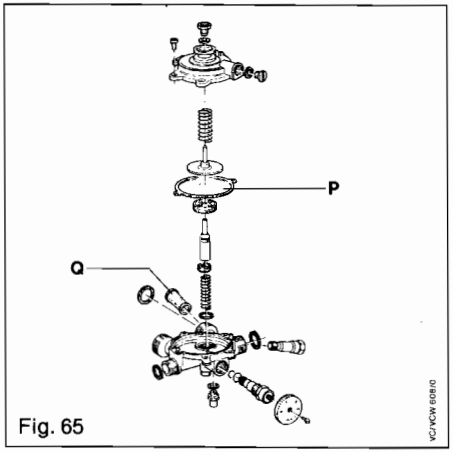

Fig. 65

Supplied by HeatingSpares247.com

14.11.4 Adjustment of servo control valve (Fig. 66)

Remove servo control valve assembly (14.11).

Adjust the distance between push rod (1) and cam (2) to 0.2 mm by slackening nut (3), turning push rod (1) and refastening nut (3). Rotate cam (2) to provide a 5-7 mm gap between the push rod (1) and cam (2).

Adjust the distance between micro-switch housing and spring plate (4) to 0.3 to 0.5 mm, using screws (5).

Reassemble in reverse order.

14.12 Change of expansion vessel

14.12.1 DHW expansion vessel (Fig. 67)

Remove outer case as under 13.3.
Turn off D.H.W. service cock.
Drain D.H.W.
Disconnect tubing nut (TN), unscrew bracket securing screw (SS) and remove expansion vessel.
Reassemble in reverse order.

14.12.2 CH expansion vessel

In the unlikely event of a failure of the CH expansion vessel either the following procedure or procedure 14.12.2.1 can be followed as appropriate.
Turn off the boiler (13.2).
Remove outer and inner case as under 13.3 and 13.4.
Release CH system pressure as under 14.24.

Isolate the appliance from the electrical mains. Disconnect external wiring. Isolate and disconnect the gas supply from the appliance.

Remove appliance from the wall as follows:

Remove combustion chamber front panel and top panel (13.4 and 13.5). Disconnect the flue hood from the flue extension piece by unscrewing screws (1, Fig. 42) and sliding the flue extension piece rearwards away from the flue hood. Disconnect union nuts (6, 9, Fig. 16). Support appliance and remove retaining nuts and reinforcing bracket (N, RB, Fig. 19). Lift appliance upwards and off wall.

Remove 4 fixing clamps (FC, Fig. 68). Lift up and take out expansion vessel to the rear.

Reassemble in reverse order.

Replace appliance as under 9.4 using new washers and gaskets.

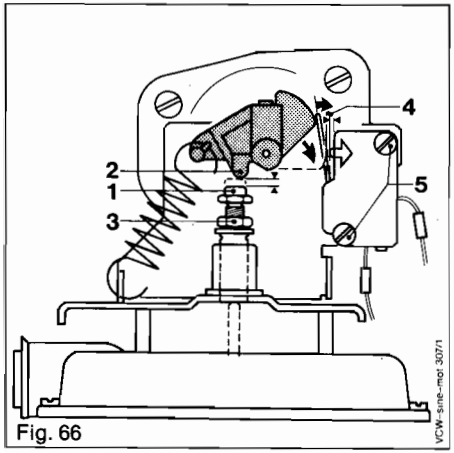

Fig. 66

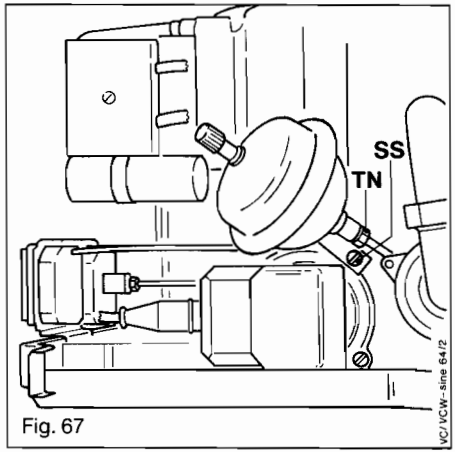

Fig. 67

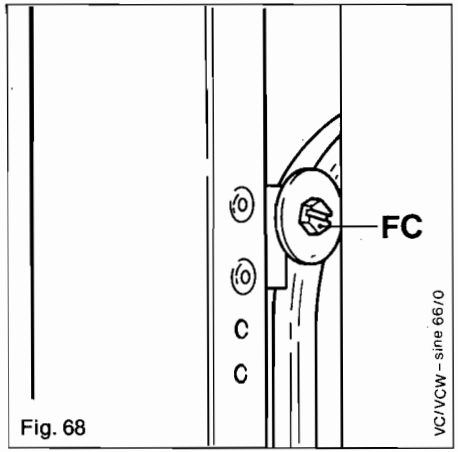

Fig. 68

Supplied by HeatingSpares247.com

14.12.2.1 External replacement vessel

Alternatively, a suitable replacement expansion vessel can be fitted external to the boiler as described in 5.11.3.

In these cirumstances, the replacement expansion vessel must be correctly sized, ignoring the original expansion vessel which can be left in position on the boiler.

14.13 Change of thermometer (Fig. 69)

Remove outer case as under 13.3.

Pull the temperature sensor (TS) out of the sensor tube. Press the two tongues into the thermometer and pull it out to the front side.

Reassemble in reverse order.

14.14 Change of pressure gauge (Fig. 70)

Turn off boiler (13.2).

Remove outer case as under 13.3.

Release CH system pressure as under 14.24

Disconnect the tubing nut (TN) of the control line and press the two tongues on the pressure gauge and pull it out to the front side.

Reassemble in reverse order.

14.15 Change of system bypass (Fig. 71)

Turn off boiler as under 13.2.

Remove outer and inner case as under 13.3 and 13.4.
Release CH system pressure and drain boiler as under 14.24 and 14.25

Disconnect the two union nuts (V) and remove bypass valve. Access to the union nuts can be gained by removing the D.H.W. expan sion vessel as under 14.12.1 and the diverter valve as under 14.6.3 if necessary.

Reassemble in reverse order using new washers.

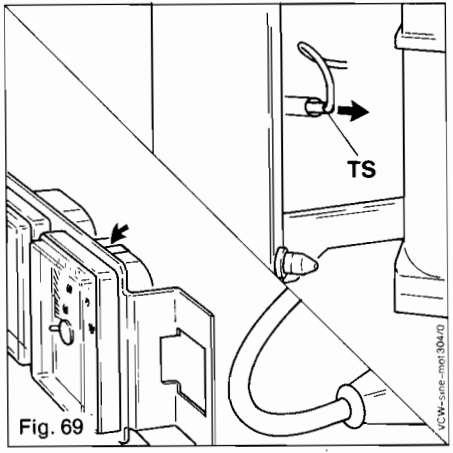

Fig. 69

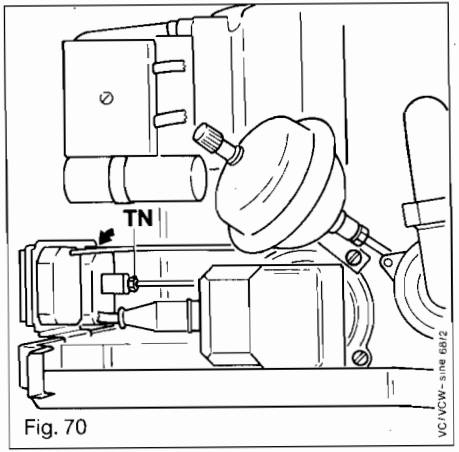

Fig. 70

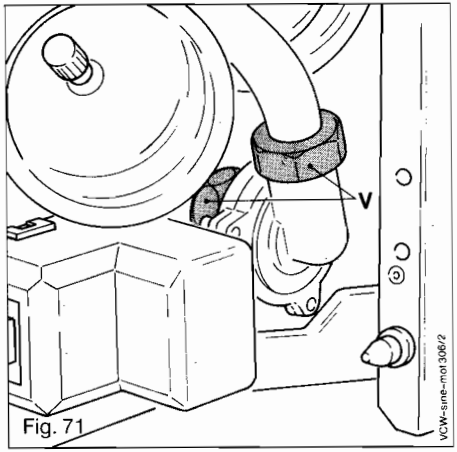

Fig. 71

Supplied by HeatingSpares247.com

14.16 Change of domestic hot water overheat thermostat

Remove the outer case as under 13.3.

DHW overheat thermostat is located on the DHW outlet pipe from the DHW heat exchanger on the front, LHS of the boiler to the left of the control box.

Note position of the cable connectors.

Remove the cable connectors (PL).

Remove the two screws securing the thermostat to the pipe.

Reassemble in reverse order.

14.17 Change of central heating overheat thermostat

The thermostat is located on the CH flow pipe at the bottom LHS of the boiler, to the rear of the DHW heat exchanger.

Remove the cable connectors.

Unscrew the thermostat from the flow pipe.

Reassemble in reverse order.

Do not overtighten the thermostat.

14.18 Change of domestic hot water pressure relief valve

Turn of the boiler as under 13.2.

Unscrew the pressure relief valve (D, Fig. 37) and collect water in a suitable container.

Reassemble in reverse order, using new washers.

14.19 Change of central heating pressure relief valve

Turn off the boiler as under 13.2.

Remove the outer case as under 13.3.

Release CH system pressure as under 14.24.

Remove the discharge pipe connection.

Unscrew the pressure relief valve from the return central heating service cock.

Reassemble in reverse order.

Supplied by HeatingSpares247.com

14.20 Change of D.H.W. heat exchanger (Fig. 72)

Turn off boiler as under 13.2.

Remove outer and inner case as under 13.3 and 13.4.

Drain the C.H. side off the boiler as under 14.24 and 14.25.

Slacken both sleeve nuts on the lower front side of the D.H.W. heat exchanger and collect water in a suitable container.

Unscrew the four sleeve nuts (SN) and remove the D.H.W. heat exchanger.

Reassemble in reverse order using new washers.

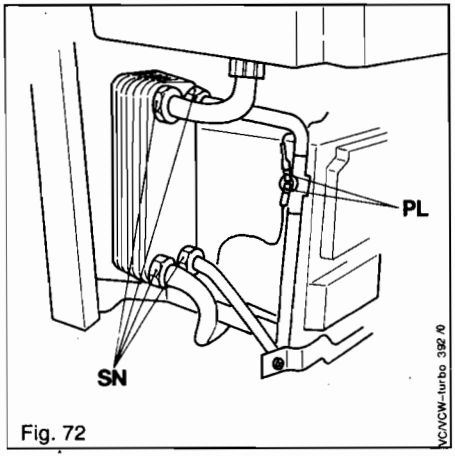

Fig. 72

Supplied by HeatingSpares247.com

14.21 Change of main heat exchanger and combustion chamber duct (Fig. 73)

Turn off the boiler as under 13.2.
Remove outer and inner case as under 13.3 and 13.4.

Remove inner case top panel as under 13.5.

Gain access to the top of the heat exchanger and remove flue hood as under 13.7.

Remove side panels of inner case (6 screws RS each side).

Drain boiler as under 14.24 and 14.25.

Disconnect the two push-on cable connectors from the main heat exchanger overheat thermostat. Unscrew thermostat.

Disconnect the union nuts situated on each side of the main heat exchanger and slide the main heat exchanger forward and out from the combustion chamber duct.

If removal of the combustion chamber duct is necessary, unscrew the union nut on the lower R.H.S. of the combustion duct and remove the four screws securing the duct to the appliance back panel. Lift the duct up and out. Reassemble in reverse order using new washers.

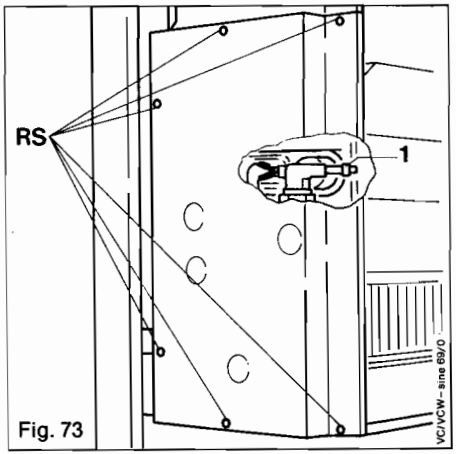

Fig. 73

Supplied by HeatingSpares247.com

14.22 Change of thermomagnet unit (Fig. 74)

Turn off the appliance as under 13.2. Disconnect the thermocouple cable from the gas section (PI, Fig. 74).

Straighten the tab washer (TW) and remove the retaining nut (RN).

Remove the four screws securing the thermomagnet housing (S)

Withdraw the thermomagnet housing.

Note: Take care not to loose the two star washers which are fitted between the thermomagnet housing and the body of the gas section.

Unhook the thermomagnet unit from the pivot pin inside the gas section by a downwards movement.

Reassemble in reverse order using a new gasket and sealing washers. It is essential that the two star washers are inserted between the body of the gas section and the thermomagnet housing (top two screws only) in order to complete the thermocouple electrical circuit.

Check for gas soundness (11.6)

Check function of flame supervision device (11.7).

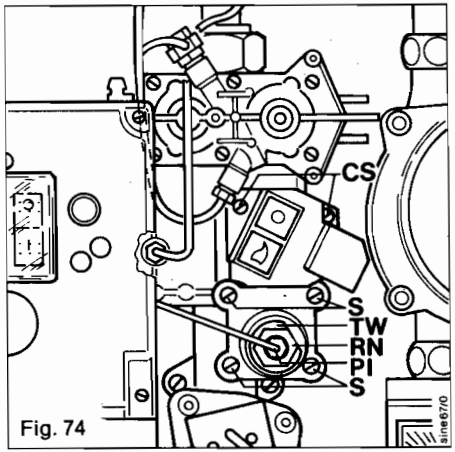

Fig. 74

Supplied by HeatingSpares247.com

14.23 Change of flame supervision device microswitch

Isolate appliance from the electrical mains.

Remove outer case.

Remove cover surrounding the push buttons on the gas section (2 screws, CS, Fig. 74).

Disconnect the two inline cable connectors in the black leads from the microswitch.

Remove the retaining screw securing the microswitch bracket to the gas section and remove the microswitch complete with the mounting bracket.

Screwdriver access is available from beneath the pump motor.

Replace microswitch assembly and check operation of microswitch. The electrical contacts must open when the lower button (with flame symbol) is pushed in. When the button is released the contacts must close.

Refit cover and reconnect microswitch leads.

Check function of the flame supervision device (11.7).

14.24 Releasing C.H. system pressure

Check C.H. service cocks are closed (4, Fig. 37).

Release pressure from the appliance by fitting a tube to a drain nipple (B, Fig. 37) and unscrewing one turn.

Drain water into a suitable container.

14.25 Draining boiler C.H. circuit

Release C.H. system pressure (14.24).

Drain the boiler by opening air vent (1, Fig. 73) and draining C.H. side of appliance through both drain nipples (B, Fig. 37).

Drain water into suitable container.

Supplied by HeatingSpares247.com

15 Fault Finding

Before proceeding, check the following:

1) Carry out preliminary electrical safety checks (see 11.1).
2) Turn ON external electrical supply and check external controls are calling for heat.
3) Turn ON gas supply and appliance gas service cock.
4) Check gas supply pressure at appliance.
5) Set boiler main switch to position 1 (ON).
6) Set heating switch to position 1 (ON).
7) Do not draw D.H.W.

Always start fault finding procedure with sheet A and follow complete sequence through to sheet H.

Finally complete with electrical safety checks (see 11.1.).

Supplied by HeatingSpares247.com

Sheet A

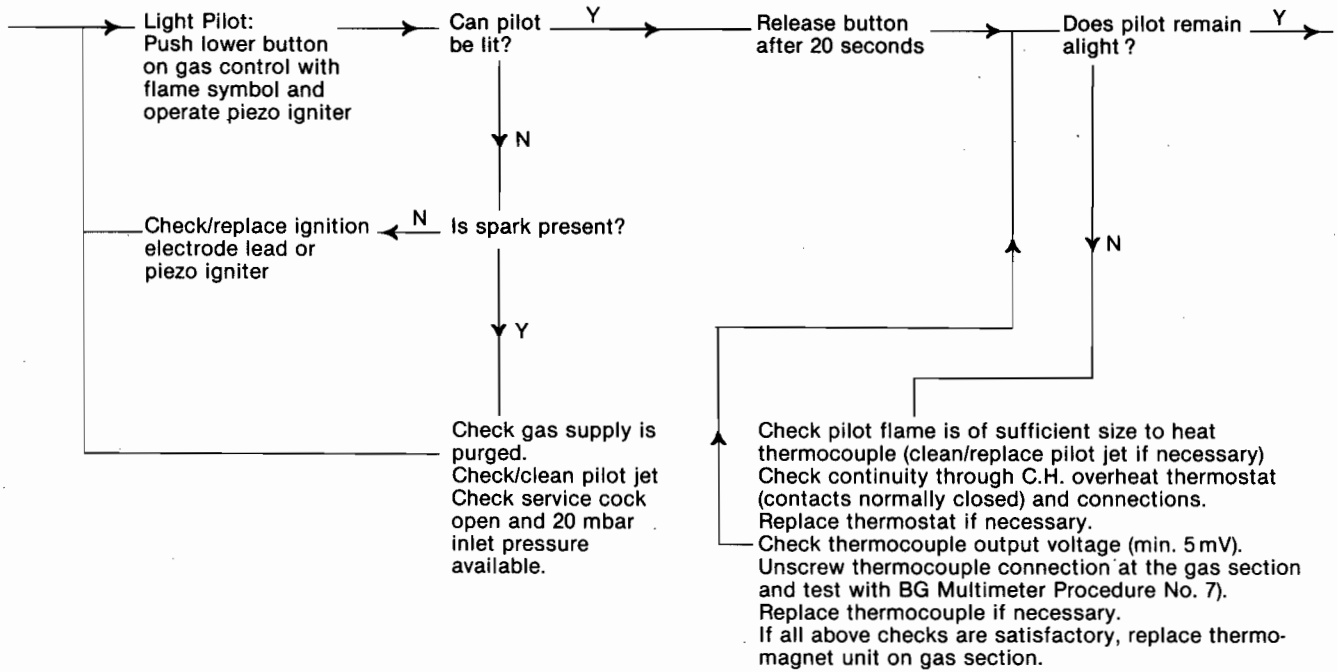

Supplied by HeatingSpares247.com

Sheet B Check electrical supply

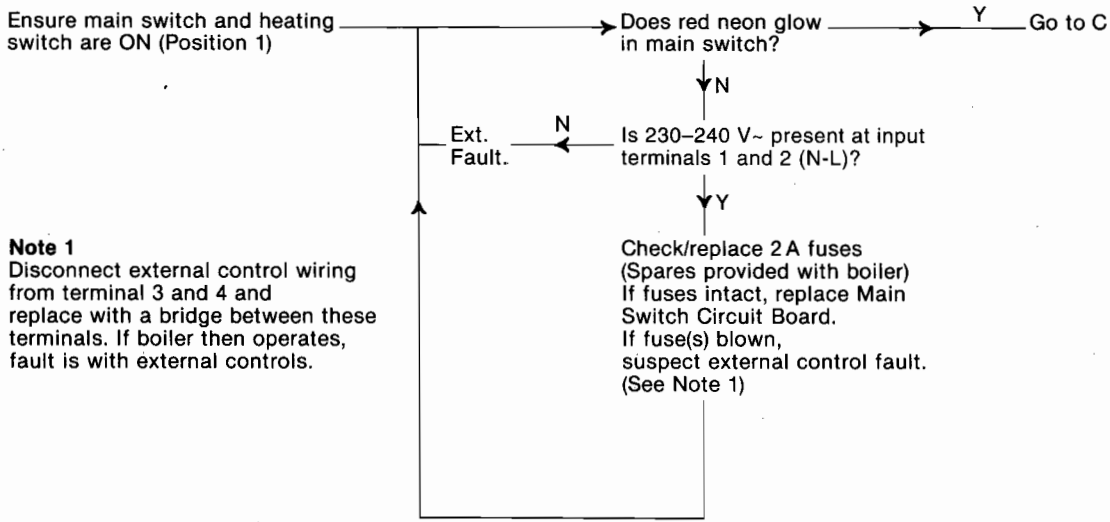

Note 1
Disconnect external control wiring from terminal 3 and 4 and replace with a bridge between these terminals. If boiler then operates, fault is with external controls.

Supplied by HeatingSpares247.com

Sheet C Check main switch

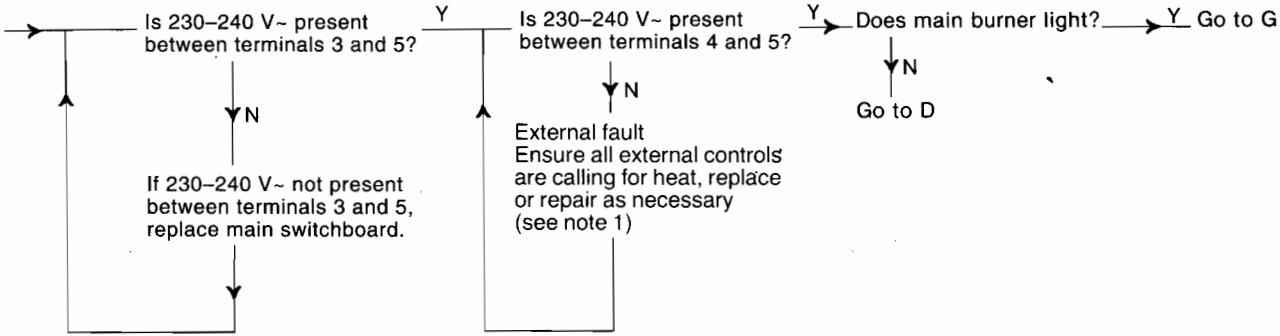

Supplied by HeatingSpares247.com

Sheet D Check operation of pump

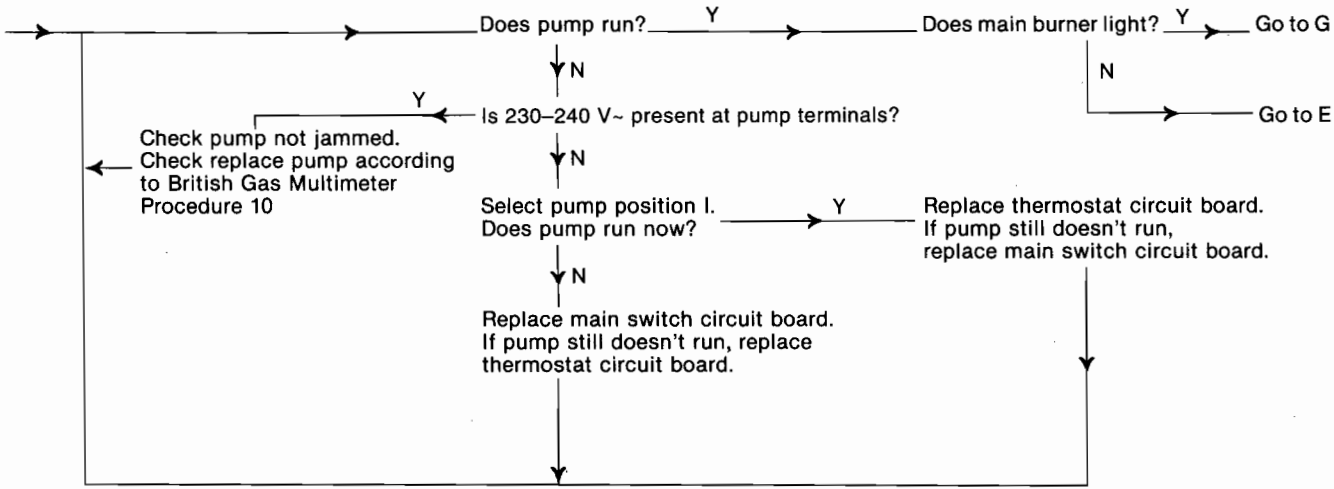

Supplied by HeatingSpares247.com

Sheet E Check operation of diverter valve

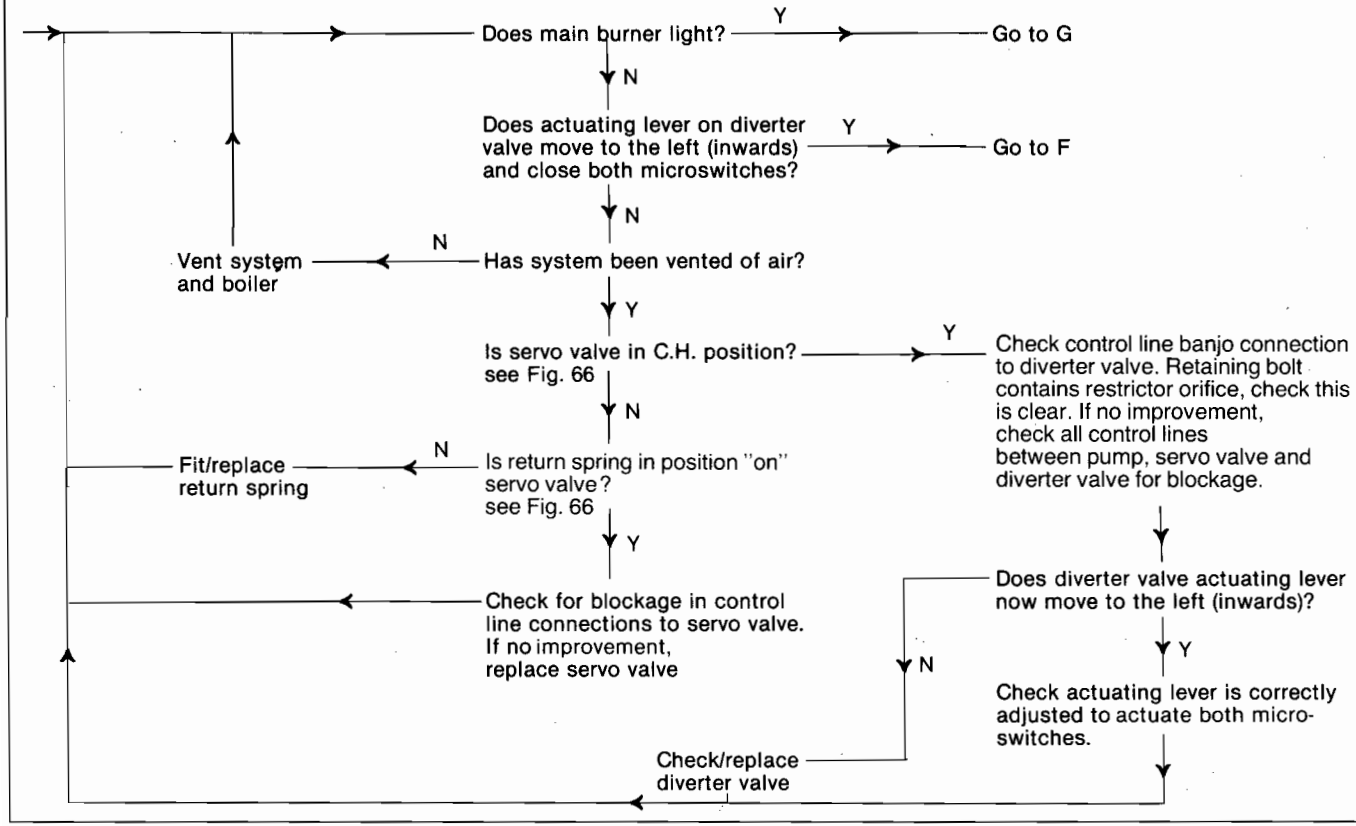

Supplied by HeatingSpares247.com

Sheet F Check gas section

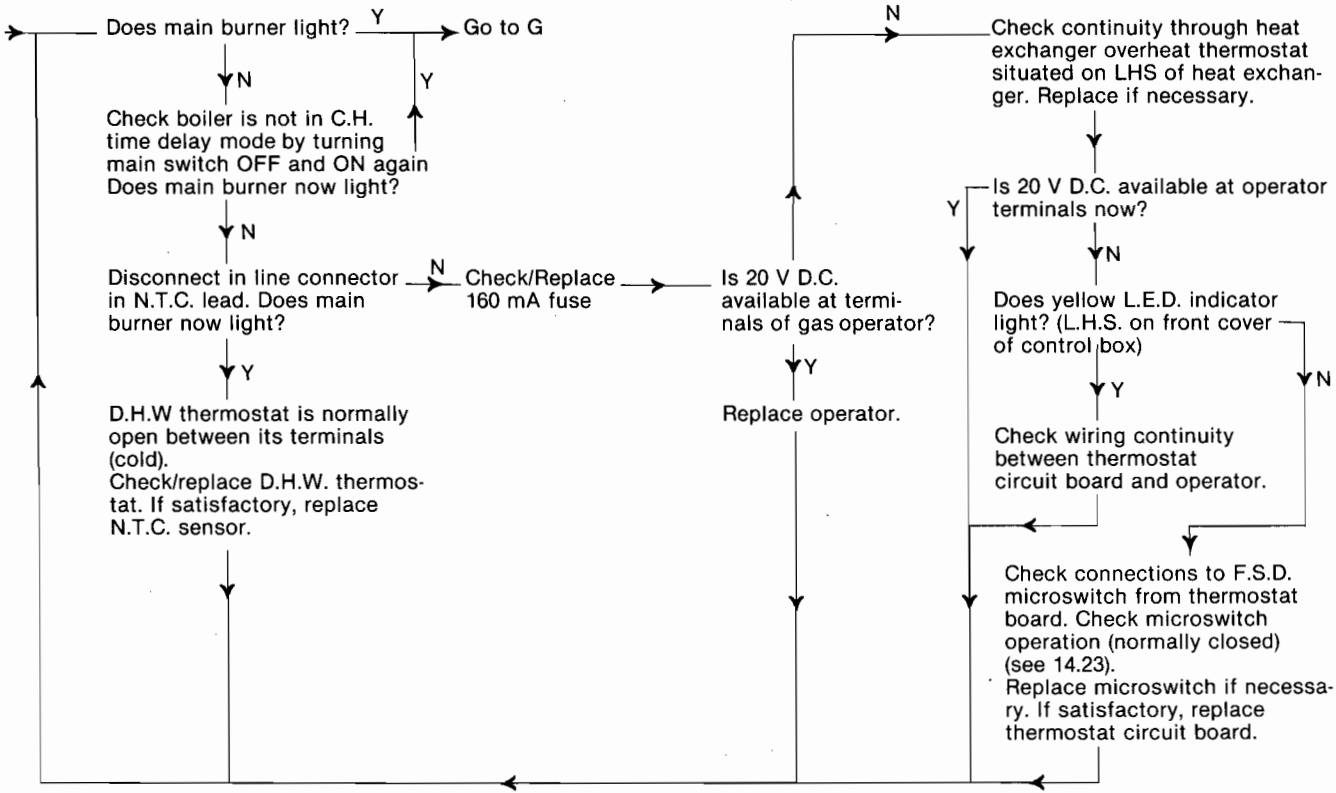

Supplied by HeatingSpares247.com

Sheet G Check burner modulation

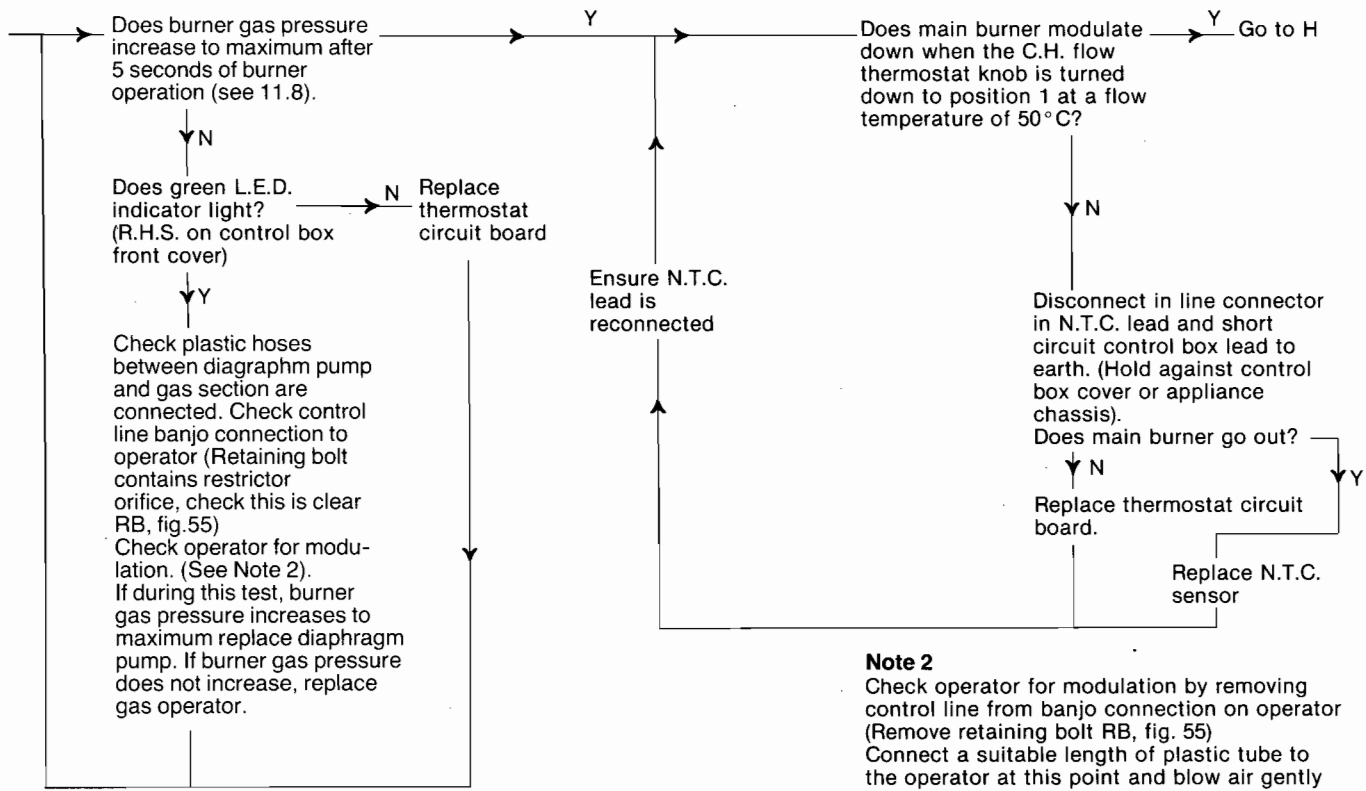

Note 2
Check operator for modulation by removing control line from banjo connection on operator (Remove retaining bolt RB, fig. 55)
Connect a suitable length of plastic tube to the operator at this point and blow air gently into operator using mouth pressure only.

Supplied by HeatingSpares247.com

Sheet H Check D.H.W. operation

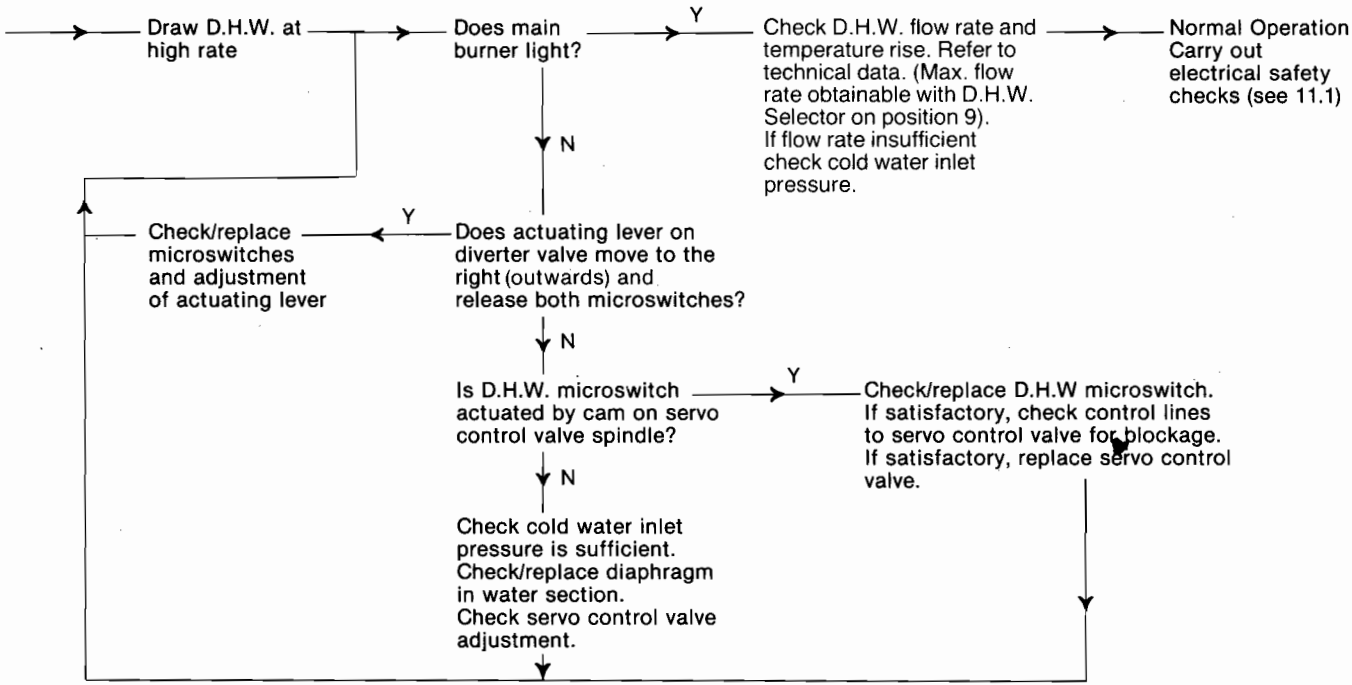

Supplied by HeatingSpares247.com

16 Electrical Diagrams

16.1 Functional Flow Diagram

Note: This diagram applies to boilers with "HY" marked on electronic control box front cover.

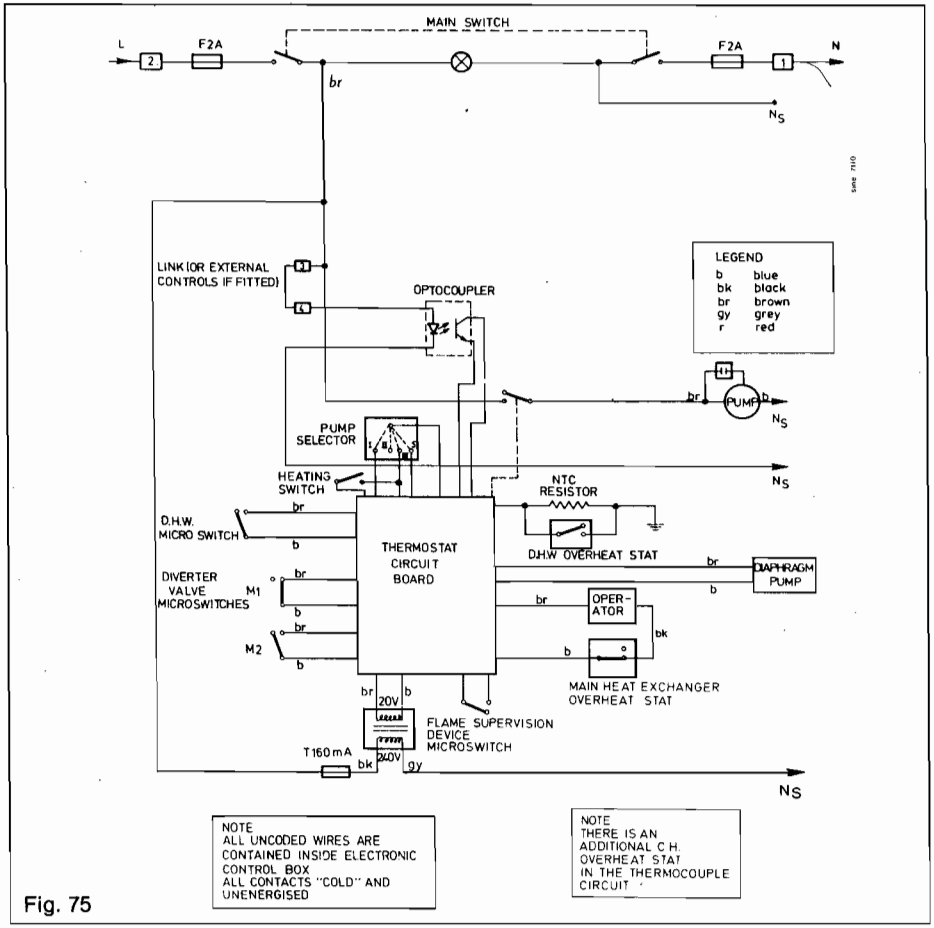

Fig. 75

Supplied by HeatingSpares247.com

16.2 Wiring Diagram

Wiring diagram for VCW GB 221 H

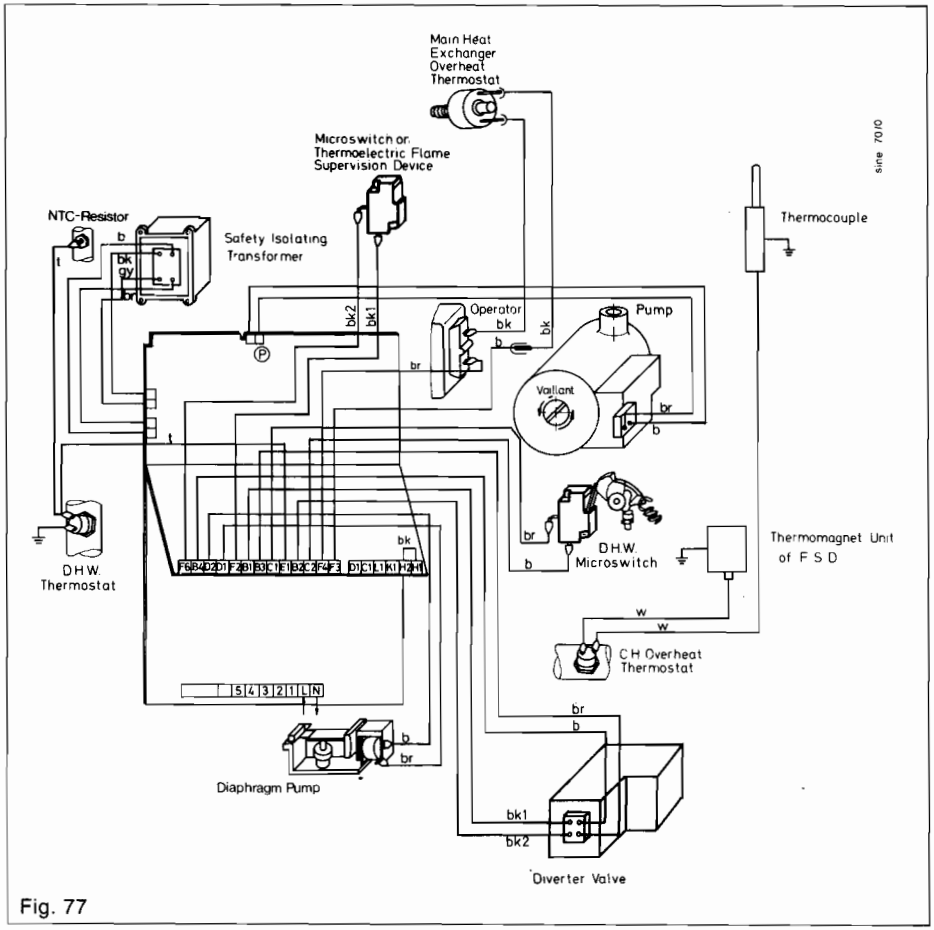

Fig. 77

Legend

br = brown
b = blue
bk = black
r = red
t = transparent

Supplied by HeatingSpares247.com

17 Short part list

Key No.	Description	Part No.	G.C. No
1	diaphragm	01-0312	262 169
2	washer	98-1511	262 335
3	burner chamber group	04-0468	255 212
7	main heat exchanger	06-1891	–
8	washer	98-1602	255 248
9	washer	98-1609	255 249
10	secondary heat exchanger	06-4947	283 585
13	pressure gauge	10-1250	255 328
14	thermometer	10-1542	255 327
17	auto. air vent.	06-1707	263 935
18	packing ring	98-0287	262 316
19	expansion vessel – (C.H.)	18-1022	–
20	washer	98-2495	–
21	expansion vessel – (D.H.W.) (if fitted)	18-1025	264 004
22	screen plate	07-5461	255 255
23	right hand side panel	07-9920	255 257
24	left hand side panel	07-9921	255 264
25	upper door	29-4012	255 265
26	lower door	29-4013	255 266
27	circulation pump (complete)	16-1108	–

Supplied by HeatingSpares247.com

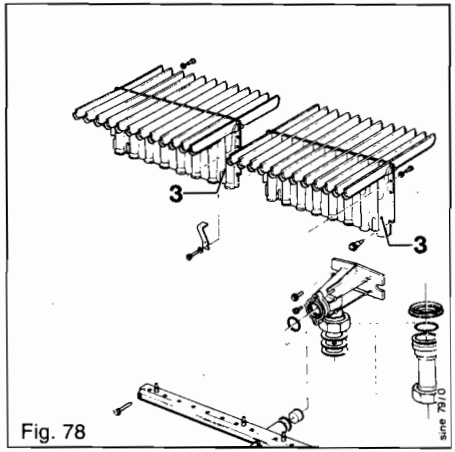

Fig. 78

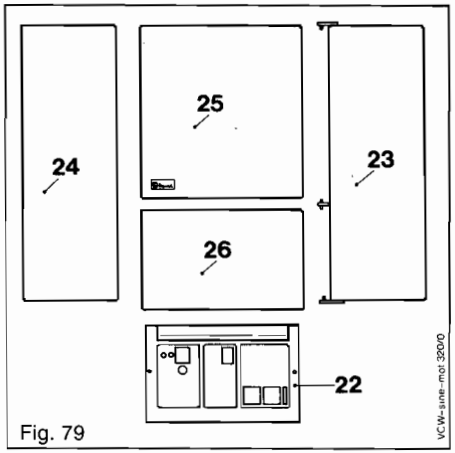

Fig. 79

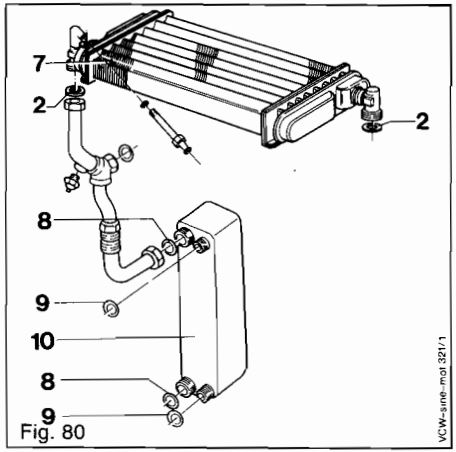

Fig. 80

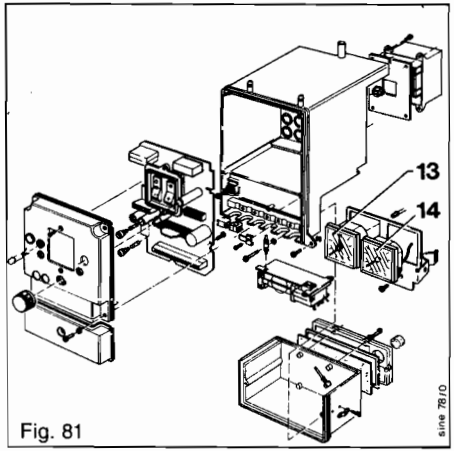

Fig. 81

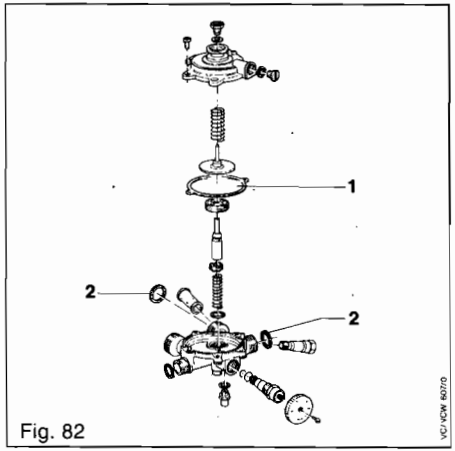

Fig. 82

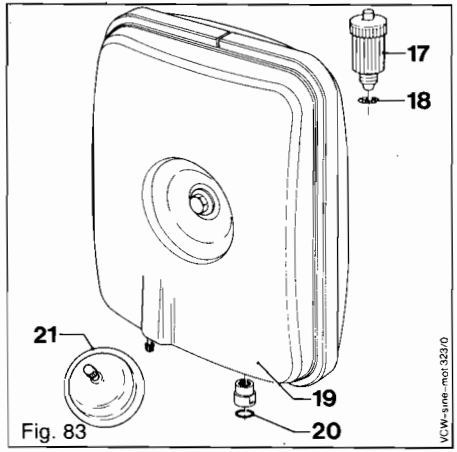

Fig. 83

Supplied by HeatingSpares247.com

18 Technical Data

[1] For systems having a larger water capacity an additional expansion vessel can be installed easily.

[2] Higher DHW temp. rises can be achieved by adjusting the user selector (see user instructions).

Type	VCW GB 221 H	Units
Nominal heating output	22 (75100) (79.2)	kW (BTU/h) (MJ/h)
Nominal heating input (based on gross C.V.)	27.3 (93200) (98.3)	kW (BTU/h) (MJ/h)
Main burner jet size for NG	16 x 7/130	number x mark.
Burner setting pressure Max rate Ignition rate	6.0 ± 0.5 (2.4) 1.6 (0.64)	mbar (in WG)
Minimum water flow for heating system 20 °C rise	940 (207)	l/h (Imp. Gal./h)
Water capacity of heat exchanger	0.57 (0.12)	l (Imp. Gal.)
Pump pressure available for central heating system	0.25 (8.4)	bar (feet)
Max. nominal flow temperature	90 (194)	°C (°F)
Maximum total water capacity of heating system (cold[1]) for sealed system	90 (20)	l (Imp. Gal.)
Delivered gas Gross C.V. (s.t.) Gas consumption (s.t.)	G 20 37.8 (1014) 2.60 (1.53)	 MJ/m³ (BTU/cu. ft) m³/h (c.f.m.)
Domestic water specification to British standard Nominal output	22 (75000)	kW (BTU/h)
Nominal temperature Minimum water pressure Flow rate (45 °C)	65 (149) 0.65 (9.4) 90 (20)	°C (°F). bar (P.S.I.) l/min. (gal/min.)
D.H.W. temp. rise[2] 10 l/min. (2.2 gal/min.) flow rate, approx. water pressure required	32 1.6 (23.2)	(°C) bar (P.S.I.)
Water flow. min. Water pressure required	3.5 (0.77) 0.3 (4.4)	l/min. (Imp. G/min.) bar (P.S.I.)
Max. water pressure	10 (145)	bar (P.S.I.)
Weight	60 (132)	kg (pound)
Electric connection Voltage Input internal Fuse / external Fuse	230–240/50 125 2 / 3	V~/Hz W Amp (slow)

Subject to alteration

We cannot accept responsibility for damage as a result of non-observance of these installation and servicing instructions.

Vaillant

Head Office
Vaillant Ltd.,
Vaillant House,
Medway City Estate, Trident Close,
Rochester, Kent ME2 4EZ
Technical 01634 292392
Service Solutions 0870 6060 777

Printed on 100% recycled paper
1197 Mü
Subject to alteration
Printed in Germany · Imprimé en Allemagne

83 12 84 GB/IR02

Supplied by HeatingSpares247.com

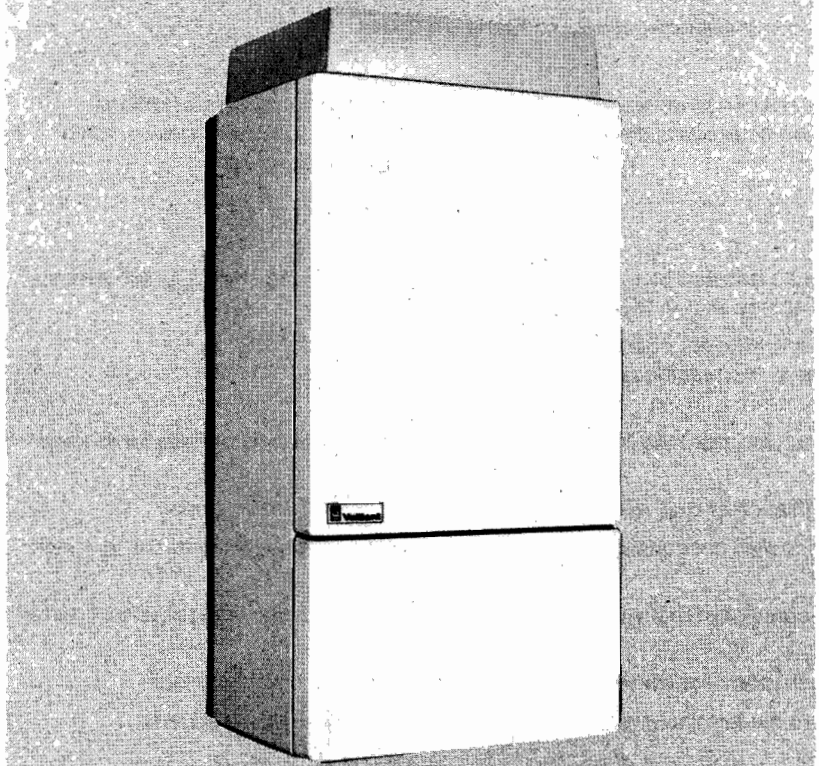

This picture shows the VCW GB 221 H

Instructions for use

Vaillant®

Combi-boiler

Natural draught balanced flue type

VCW GB 221 H

GC-No. 47 044 14

Open-flued type

VCW GB 240 X H

GC-No. 47 044 15

Open-flued type

VCW GB 280 X H

GC-No. 47 044 16

Vaillant

Supplied by HeatingSpares247.com

Dear Customer!

All you need to know about your Vaillant Combi is contained in these instructions, so that you will find:

In the left hand column, a series of illustrations demonstrating step by step the whole procedure.

In the centre column all necessary information which explains the illustrated procedure.

In the right hand column, additional information which may prove useful for servicing and handling.

Introduction

Please note that your Vaillant COMBI Compact boiler must be installed by a competent person (i. e. CORGI registered), in accordance with the current issue of the Gas Safety (Installation and Use) regulations 1994, as amended.

Your boiler requires air for combustion and to ensure safe and efficient operation of the flue.
Do not obstruct any purpose provided ventilation openings to the outside air.
This appliance must be earthed.

If the appliance is installed in a compartment do not obstruct any purpose provided ventilation openings, and do not use for storage purposes.

If a gas leak or fault exists, or is suspected, turn off the appliance and consult your local Gas Region or Service Engineer.

As the colours of the wires in the mains lead of this appliance may not correspond with the coloured markings identifying the terminals in your plug, proceed as follows:

- The wire which is coloured green-and-yellow must be connected to the terminal in the plug which is marked with the letter E or by the earth symbol ⏚ or coloured green-and-yellow.
- The wire which is coloured blue must be connected to the terminal which is marked with the letter N or coloured black.
- The wire which is coloured brown must be connected to the terminal which is marked with the letter L or coloured red.

The following minimum clearances around the appliance case must be maintained.

80 mm (3.2") either side. The side clearance may be reduced to 25 mm (1") from removeable fittings such as kitchen untis.
150 mm (6") below
100 mm (4") above

Supplied by HeatingSpares247.com

PREPARATION FOR STARTING

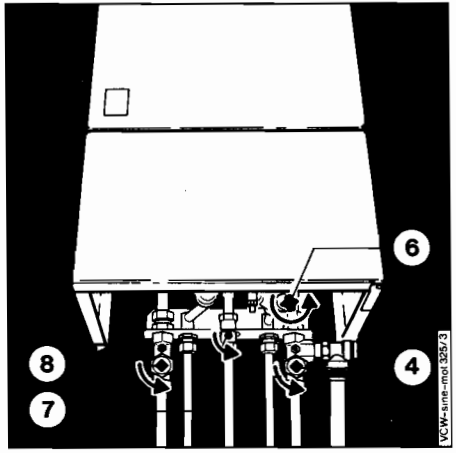

Check of supply pipes

Ensure cold water shut-off valve ⑥ and both the flow and return service cocks ⑧ and ④ are open. Also check that the gas service cock ⑦ is open. Turn cold water shut off valve anticlockwise to open.

Normally the flow, return and gas service cocks are open, and the line marking will have the same direction as the pipe.

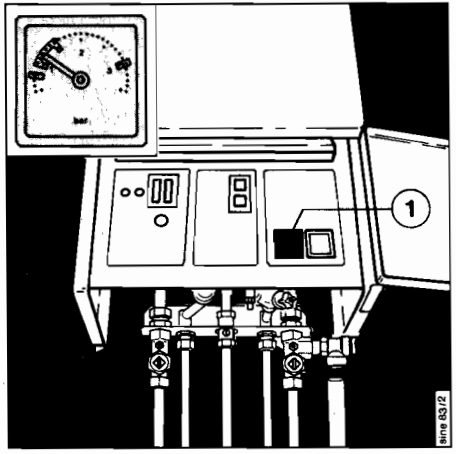

Check of water contents

Open the lower door by pulling outwards. Check the water contents of the system. The white hand of the pressure gauge ① should be within the green band (about 1 to 1.5 bar). If the hand is on or below the mark (about 0.8 bar) when the system is cold, then your installer should be called to refill the system. (The pressure may increase when the appliance is in use).

Topping up should only be carried out by a service engineer or your installer.

Supplied by HeatingSpares247.com

PREPARATION FOR STARTING

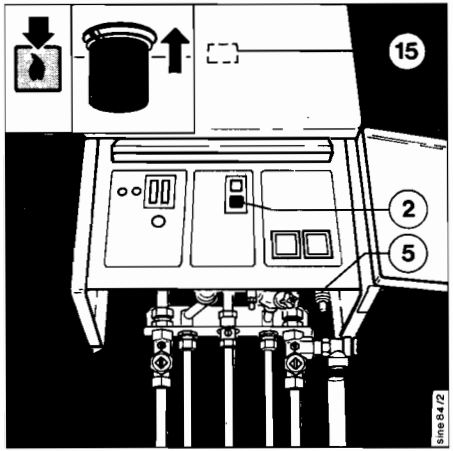

To light the pilot

Open both doors to the appliance. Press the push button ② hold it down. Light the pilot by operating the piezo ignitor ⑤ several times.
Check that the pilot is alight by looking through the viewing window ⑮.
After pilot ignition, keep the push button ② depressed for about 10 seconds.

If the pilot does not light, hold the button ② depressed for a longer period to allow any air to escape from the pilot line and operate the piezo igniter several times. If the pilot flame goes out when button ② is released,

WAIT AT LEAST 3 MINUTES

before repeating the pilot lighting procedure.

Supplied by HeatingSpares247.com

DOMESTIC HOT WATER OPERATION

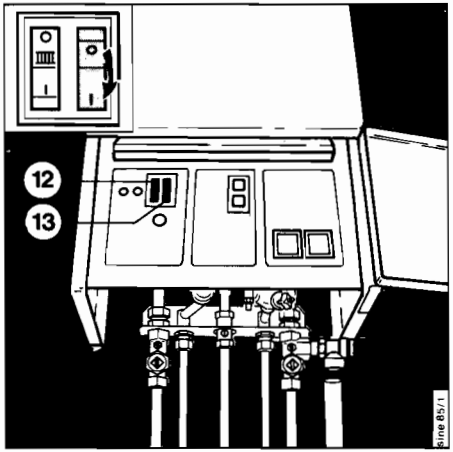

Switch on main switch

Ensure heating switch ⑫ and main switch ⑬ are off (position **0**).
Turn the electicity supply on. Push main switch ⑬ into position **I**.
(main switch lights up).

At this stage your Vaillant Combi is ready to supply hot water.
When the main switch lights up, the appliance can be operated.

Attention

The main switch should only be operated if – as described under "Check water contents" on page 3 – the appliance is correctly filled with water. Otherwise the heating pump **may** be damaged.

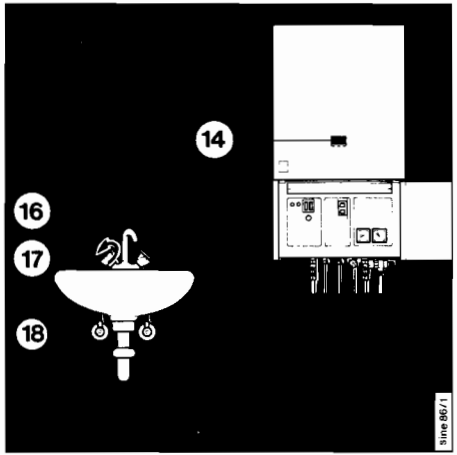

To obtain hot water

On opening hot water tap ⑰ at a supply point (basin, shower, sink) the Combi will light after an initial short delay. With the tap fully open, you should receive the maximum flow rate of hot water. With the tap only approx. half open, a lower flow rate may be achieved. By mixing in cold water you can adjust to any required lower temperature. On closing the tap the appliance automatically cuts out or changes to heating, if set to do so. After opening the upper door by pulling outwards, the operation of the burner can be seen through viewing window ⑭.

If the hot water flow rate appears reduced, check

- cold water shut-off valve is completely open.
- any valves fitted between tap and appliance are open.
- spout outlet is not blocked.

Note: Boiler will not light at very low flow rates.

The supply of hot water takes precedence over the heating system, yet has no disturbing effect on the steady heating of your rooms for normal periods of use.

Supplied by HeatingSpares247.com

TEMPERATURE SELECTOR · DOMESTIC HOT WATER

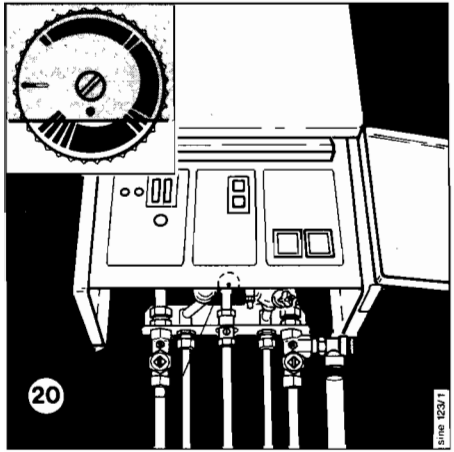

Set the domestic hot water temperature selector 20 as follows:

The domestic hot water temperature can be increased by reducing the water flow rate from the appliance. Turn the knob anti-clockwise.

The domestic hot water temperature can be reduced by increasing the water flow rate from the appliance.
Turn the knob clockwise.

Supplied by HeatingSpares247.com

HEATING OPERATION

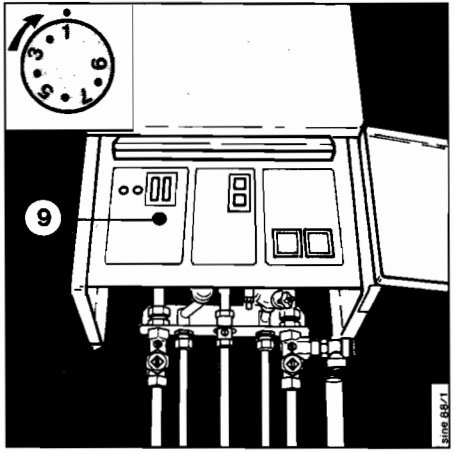

Set the flow thermostat

The flow thermostat knob ⑨ adjusts the operating temperature of the boiler for central heating.

Turn the knob:

Clockwise to **Increase** boiler temperature, the maximum setting is 9.

Anti-Clockwise to **Decrease** boiler temperature, the minimum setting is 1.

For optimum control of your heating system the following settings are recommended:

Spring and Autumn	6 to 7
Winter	8 to 9

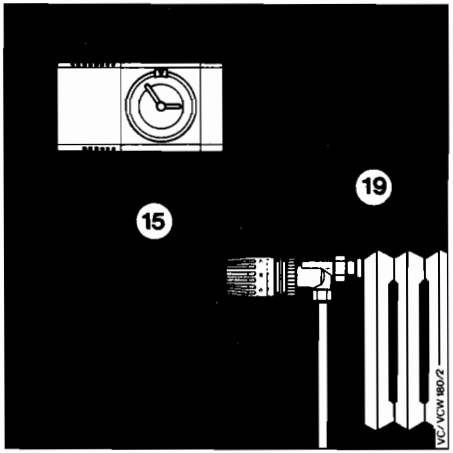

Setting room temperature

Set the room thermostat ⑮ or thermostatic radiator valve ⑲ according to the instructions supplied with the control.

The room thermostat or thermostatic radiator valves will provide more accurate and economic room temperature control than just the boiler thermostat.

Supplied by HeatingSpares247.com

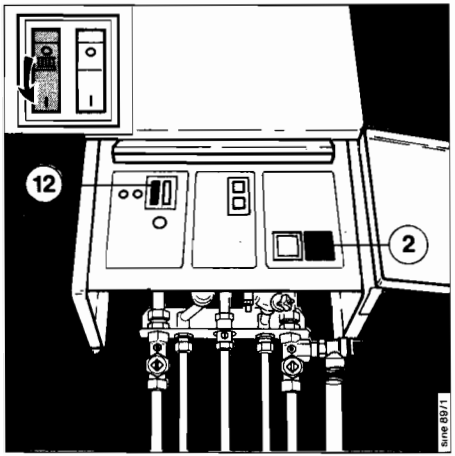

Switching on the heating switch

Push the heating switch ⑫ to **I**. The central heating system will then start if heat is required. The system will now operate automatically and controls the room temperature according to the temperature selected on the boiler thermostat or external controls.
The flow thermometer ② indicates the temperature of the water in the central heating circuit, NOT of domestic hot water. On this setting your Vaillant Combi will also provide domestic hot water.

Note:
In the summer time, when central heating is not required, push heating switch ⑫ to position O (OFF).

On turning the room thermostat or boiler thermostat to a higher setting, the boiler may not fire immediately. This is due to the integral "anti-cycling" device in the boiler preventing rapid on and off operation of the boiler.

Supplied by HeatingSpares247.com

SHUTTING DOWN · CARE AND MAINTENANCE · FROST PROTECTION

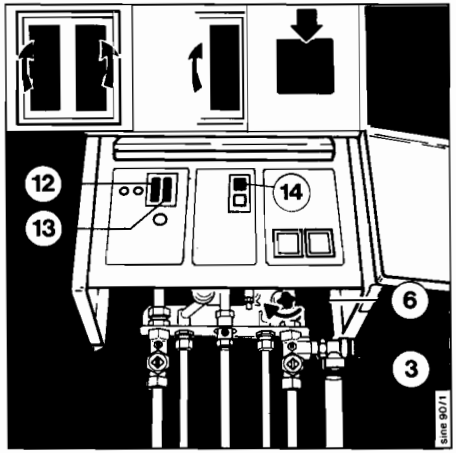

To turn off the boiler

To turn off the central heating and hot water for short periods of time
push the main switch ⑬ to position '0'.

To turn off the the central heating only
switch off by pushing the heating switch ⑫ to position '0'.
(Normal position during summer time!)

To turn off central heating and hot water for longer periods of time
push the main switch ⑬ to position '0' and also press the push button ⑭ to shut off the pilot.

Should you leave for a longer time (i.e. summer holidays) you should also close the cold water shut-off valve ⑥, isolate the electrical supply and turn off the gas supply.
The pressure relief valve ③ is provided for safety reasons and must not be interfered with.

Note:

If outdoor temperatures are low, the high efficiency of the appliance (energy saving) may lead to vapour formation on the external terminal of the flue duct. This is a normal physical phenomenon!

Care and Maintenance

Clean the outer casing of the boiler with a damp cloth and a little soap. Do not use any abrasive or solvent cleaning material which could damage the casing or plastic fittings.

To ensure continued efficient operation of the appliance, it is recommended that it is checked and serviced as necessary at regular intervals. The frequency of servicing will depend upon the particular installation conditions and usage, but in general once per year should be adequate. It is the law that all servicing work is carried out by a competent person such as British Gas or other Corgi registered personal. Refer to the label on the appliance "Advice, Service, Repairs" for details of who to contact.

Frost Protection

Please ensure that, if you are absent during a period of frost, the central heating system remains in operation and the rooms are kept above freezing point.
It must then be remembered, however, that the appliance will be automatically switched off by the built-in monitoring devices if certain faults occur, e.g. interruption in the energy supply (gas, oil, electricity) or faults in the flue gas system.
Alternatively, you can drain both the central heating system and the appliance.
We do not recommend the addition of anti-freeze to the system water. This could lead to deterioration of seals and diaphragms as well as to noisy operation, for which – including any consequential damage – we cannot accept any responsibility.

Supplied by HeatingSpares247.com

FUEL SPILLAGE SENSOR (only for VCW GB 240, 280 X)

These Vaillant open flued central heating boilers are fitted with a flue spillage sensor. In the event that flue gases are not properly drawn into the flue system the flue spillage sensor will automatically shut down the appliance.

If the boiler shuts down for any reason, operation will be prevented for between 15 and 20 minutes. After 20 minutes it will be possible to use the appliance in accordance with the instructions for use.

IMPORTANT

In case of a repetive boiler cut-off, disconnect the main switch and charge a qualified fitter with the appliance check.

If the appliance repeatedly shuts down **do not** use it and consult your qualified installer or service engineer.

Supplied by HeatingSpares247.com

OPERATING SUMMARY

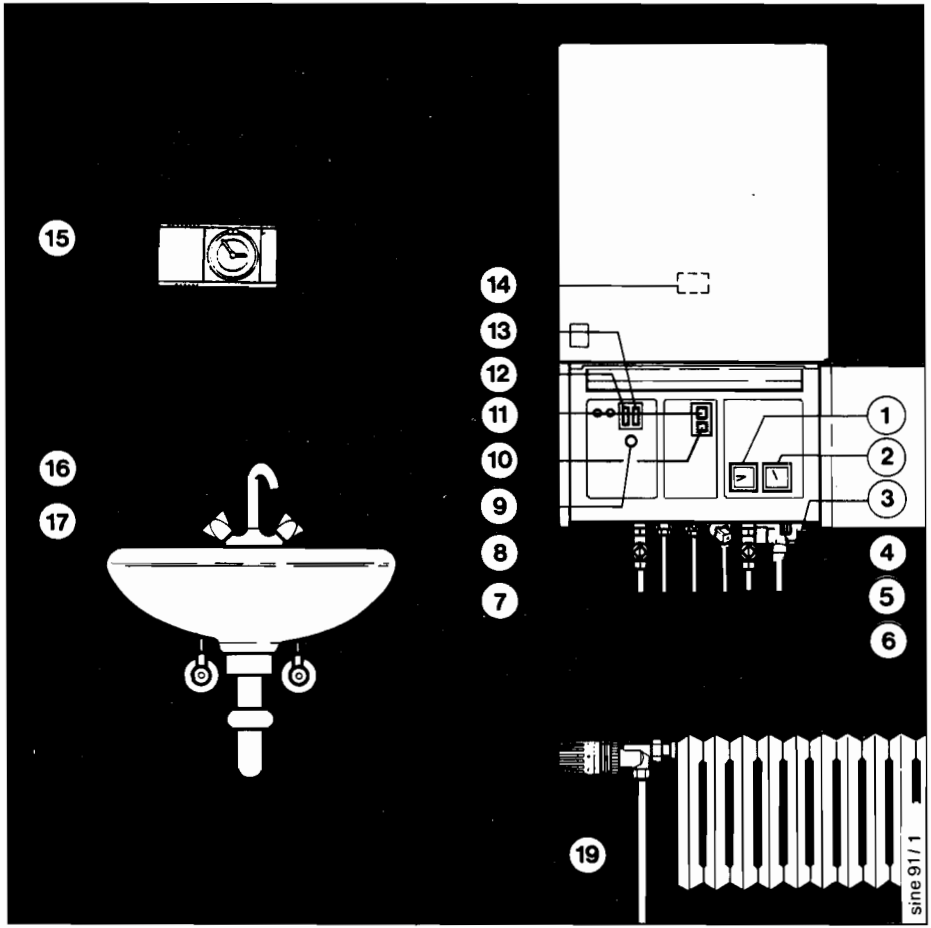

① Pressure gauge
② Flow thermometer
③ Pressure relief valve
④ Heating return service cock
⑤ Piezo igniter
⑥ Cold water shut off valve
⑦ Gas service cock
⑧ Heating flow service cock
⑨ Flow thermostat
⑩ Push button to light the pilot
⑪ Push button to shut-off the pilot
⑫ Heating switch
⑬ Main switch
⑭ Viewing window
(behind the appliance upper door)
⑮ Room thermostat
⑯ Water outlet
⑰ Hot water tap
⑲ Thermostatic radiator valve (if fitted)

We do not accept any liability for damage arising as a result of the non-observance of these operating instructions.

Supplied by HeatingSpares247.com

83 22 17 GB / IR01

Vaillant

HEATING, CONTROLS, HOT WATER

Head Office
Vaillant Ltd., Vaillant House,
Medway City Estate, Trident Close,
Rochester, Kent ME2 4 EZ

Sales 01634 292310
Service Freephone 0800 318076
Technical Advice 01634 292392
Training 01634 292370

0797 Mü
Subject to alteration
Printed on 100% recycled paper
Printed in Germany